ADMIRAL CHASSIS 18Y4BSA, EFA, ESA, ESB, LSA, PSA, 18Z4ES, ESA, ESB, FS, FSA, FSB, LSA, PSA

DISASSEMBLY INSTRUCTIONS

CHASSIS REMOVAL

1. Remove 4 push-on type control knobs from the front.

2. Remove rear cover by prying clips loose.

3. Remove 2 phillips head screws and the escutcheon from the side.

4. Remove 2 metal screws holding the side control panel.

5. Release spring clips and remove the on-off-volume and contrast control.

6. Remove speaker plug, picture tube socket, ion trap, yoke clamp, yoke and HV lead.

7. Remove 4 chassis bolts from the bottom.

8. Remove the chassis.

9. Remove 2 speaker nuts and speaker with audio output transformer attached. NOTE: Some versions may also have the filter choke mounted on the speaker.

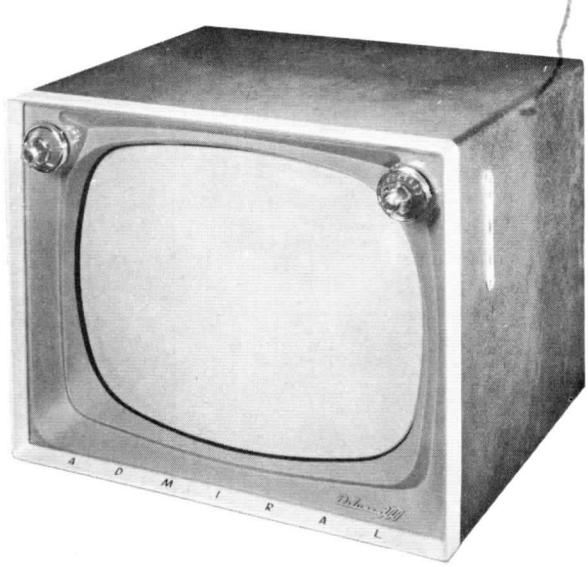

ADMIRAL CHASSIS 18Y4BSA, EFA, ESA, ESB, LSA, PSA, 18Z4ES, ESA, ESB, FS, FSA, FSB, LSA, PSA

MODELS	CHASSIS
T2306DA, T2307DA	18Y4BSA
C23A6A, C23A7A	18Y4EFA
C23A1A, C23A2A, C23A3A, C23A8A	18Y4ESA
T2301DRA, T2302DRA, T2303DRA	18Y4LSA
T23E1A, T23E2A, T23E3A	18Y4PSA
C323A6, C323A7, C323A16, C323A17, C323A19, T323A1, T323A3, T323A3LN	18Z4ES
C323A6A, C323A7A, C323A16A, C323A17A, C323A19A	18Z4ESA
(Models Unknown)	18Z4ESB
C325A6, C325A7	18Z4FS
C325A6A, C325A7A	18Z4FSA
(Models Unknown)	18Z4FSB
T2302DSA, T2303DSA	18Z4LSA
T323A1A, T323A2A, T323A2BZA, T323A3A, T323A3LNA	18Z4PSA

SERVICING IN THE FIELD

TUNER OSCILLATOR ADJUSTMENTS

Touch-up adjustment of the VHF oscillator is possible by removing the channel selector and fine tuning knobs. Set the fine tuning at the centerof its range. The adjustments are accessible, one at a time, as the channel selector is rotated. Adjust for best picture and sound.

PICTURE TUBE SAFETY GLASS CLEANING

Remove 4 knobs from the front of the cabinet.
Remove the metal screws holding the bezel, mask and safety glass from the bottom of the front.
Pull out from bottom to remove the assembly.

FOCUS

The focus may be varied by the position of a strap on the base of the picture tube. The strap can be connected between pins 6 and 2 or 6 and 10. Readjust the Ion trap for the best focus consistent with maximum brightness.

HORIZONTAL OSCILLATOR FIELD ADJUSTMENT

The horizontal frequency coil is used as the horizontal hold control. Adjust the horizontal hold until the picture synchronizes horizontally. For location, see tube placement chart.

SOUND IF DETECTOR BUZZ ADJUSTMENT

To eliminate sound IF detector buzz, adjust the ratio detector secondary (A10) located on top of chassis.

FUSES

One fuse is used for LV power supply protection. (For location see tube placement chart).

CENTERING

Centering is accomplished mechanically by adjusting two magnetic rings around the neck of the picture tube. Rotate the two rings around the neck of the tube until the picture is properly centered.

HOWARD W. SAMS & CO., INC. • Indianapolis 5, Indiana

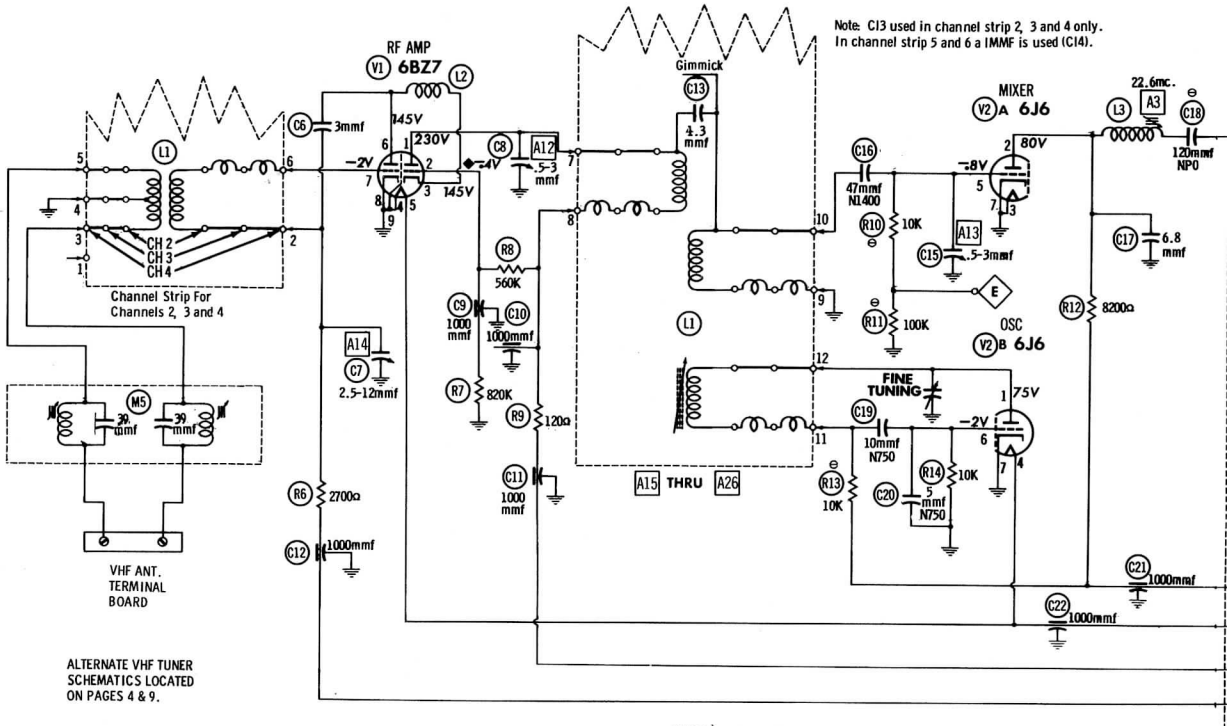

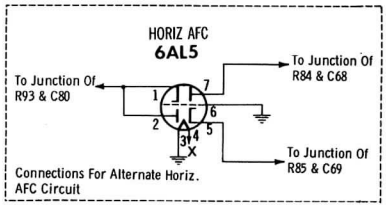

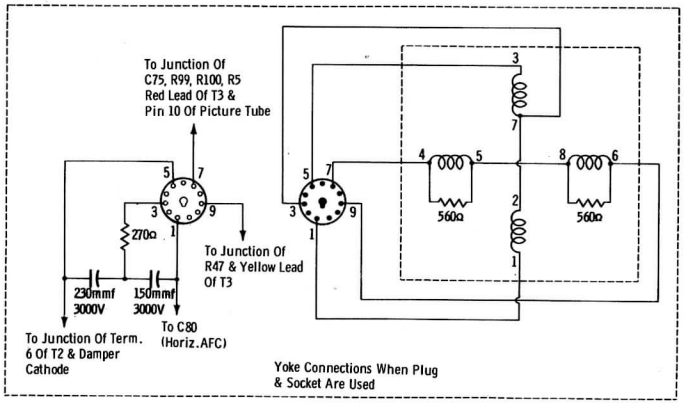

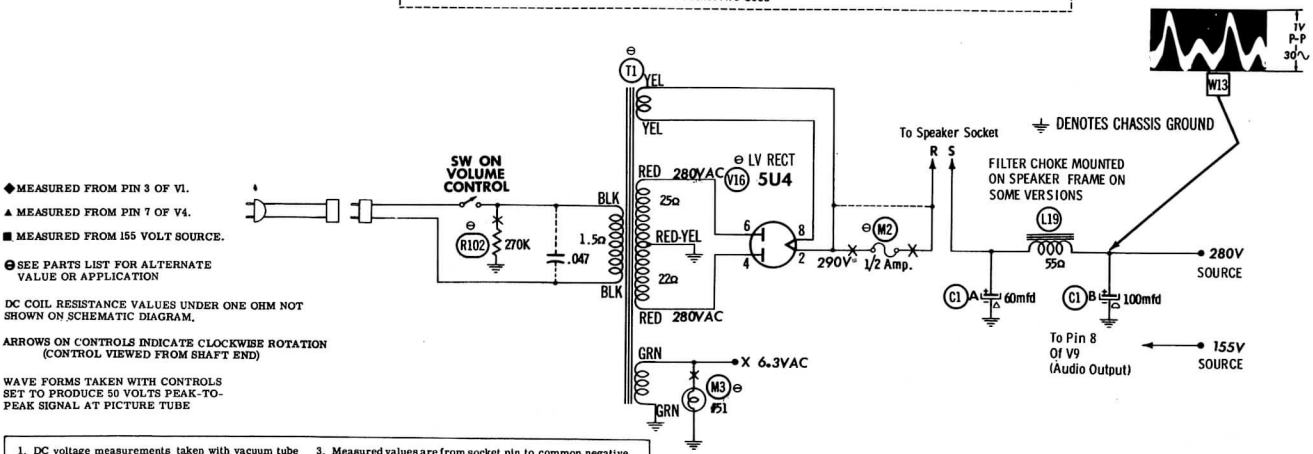

◆ MEASURED FROM PIN 3 OF V1.

▲ MEASURED FROM PIN 7 OF V4.

■ MEASURED FROM 155 VOLT SOURCE.

⊖ SEE PARTS LIST FOR ALTERNATE VALUE OR APPLICATION

DC COIL RESISTANCE VALUES UNDER ONE OHM NOT SHOWN ON SCHEMATIC DIAGRAM.

ARROWS ON CONTROLS INDICATE CLOCKWISE ROTATION (CONTROL VIEWED FROM SHAFT END)

WAVE FORMS TAKEN WITH CONTROLS SET TO PRODUCE 50 VOLTS PEAK-TO-PEAK SIGNAL AT PICTURE TUBE

1. DC voltage measurements taken with vacuum tube voltmeter; AC voltage measured at 1,000 ohms per volt.
2. Pin numbers are counted in a clockwise direction on bottom of socket.
3. Measured values are from socket pin to common negative unless otherwise stated.
4. Line voltage maintained at 117 volts for voltage readings.
5. All controls set for normal operation; no signal applied.

A PHOTOFACT STANDARD NOTATION SCHEMATIC

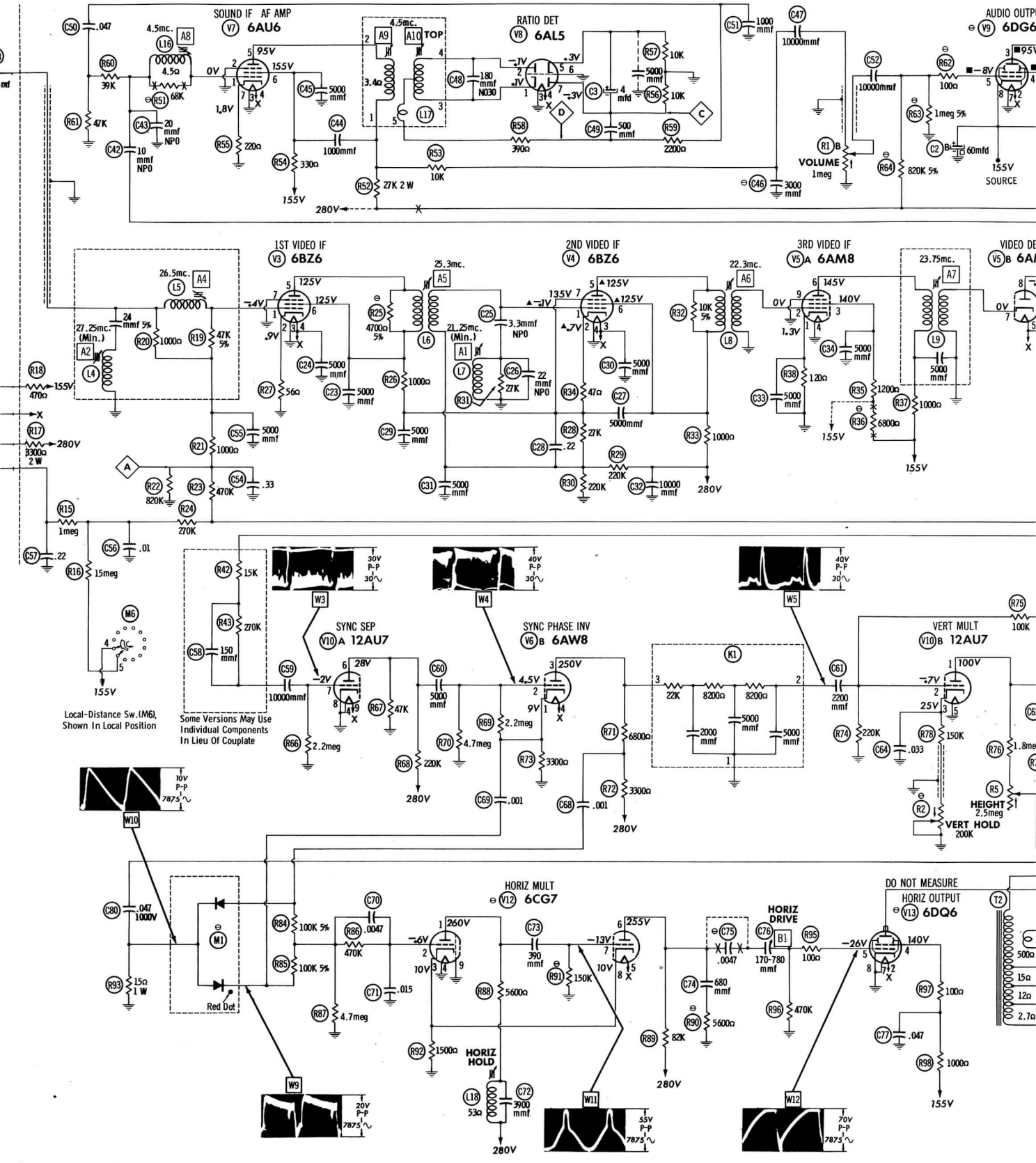
SOUND IF AF AMP
V7 6AU6
RATIO DET
V8 6AL5
AUDIO OUTP
V9 6DG6
VOLUME
1meg
155V
SOURCE
1ST VIDEO IF
V3 6BZ6
2ND VIDEO IF
V4 6BZ6
3RD VIDEO IF
V5A 6AM8
VIDEO DE
V5B 6A
SYNC SEP
V10A 12AU7
SYNC PHASE INV
V6B 6AW8
VERT MULT
V10B 12AU7
HEIGHT
2.5meg
VERT HOLD
200K
Local-Distance Sw.(M6),
Shown In Local Position
Some Versions May Use
Individual Components
In Lieu Of Couplate
HORIZ MULT
V12 6CG7
HORIZ
DRIVE
DO NOT MEASURE
HORIZ OUTPUT
V13 6DQ6
HORIZ
HOLD
Red Dot

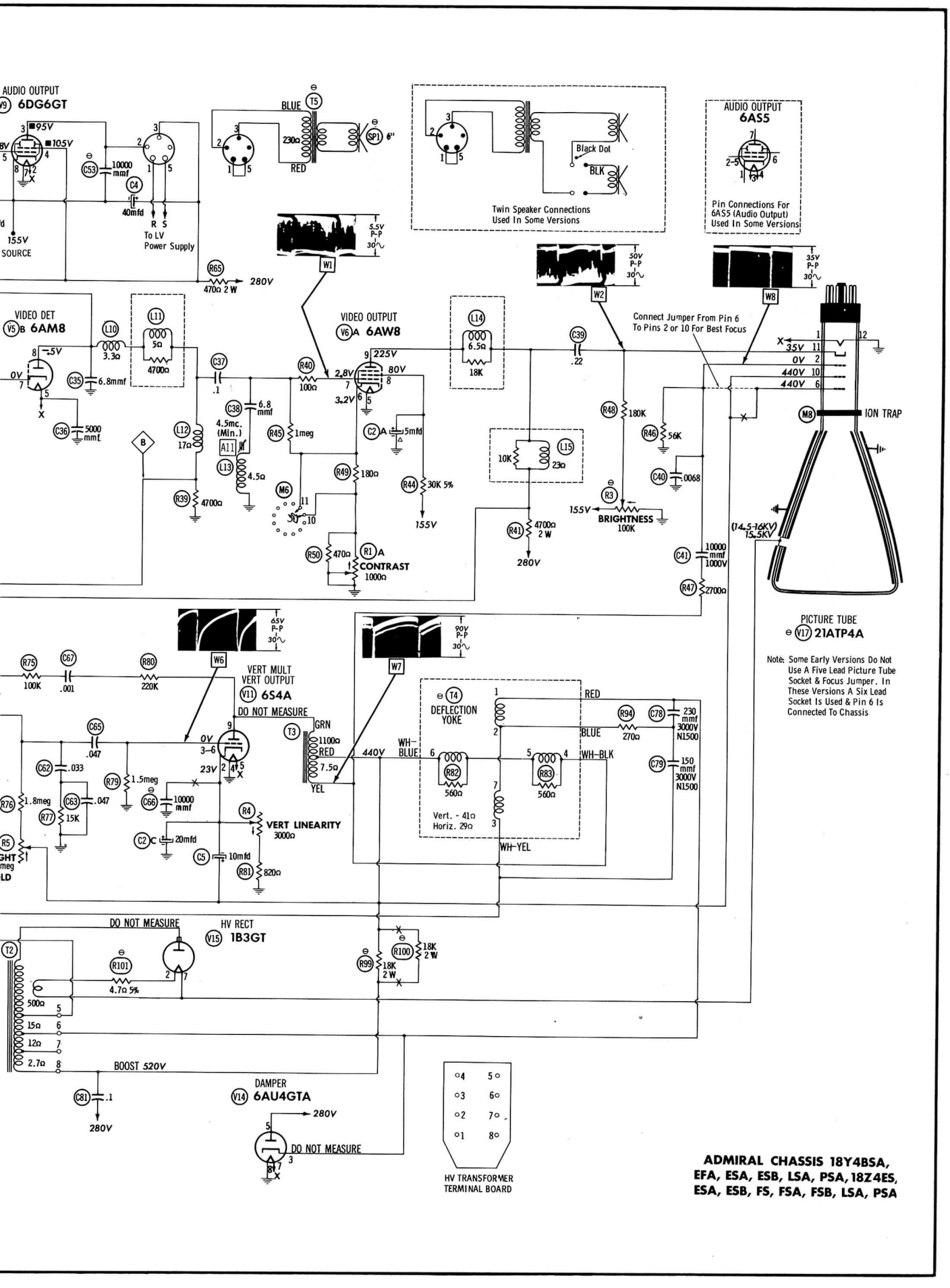

ADMIRAL CHASSIS 18Y4BSA, EFA, ESA, ESB, LSA, PSA, 18Z4ES, ESA, ESB, FS, FSA, FSB, LSA, PSA

ADMIRAL CHASSIS 18Y4BSA, EFA, ESA, ESB, LSA, PSA, 18Z4ES, ESA, ESB, FS, FSA, FSB, LSA, PSA

TUBE PLACEMENT CHART

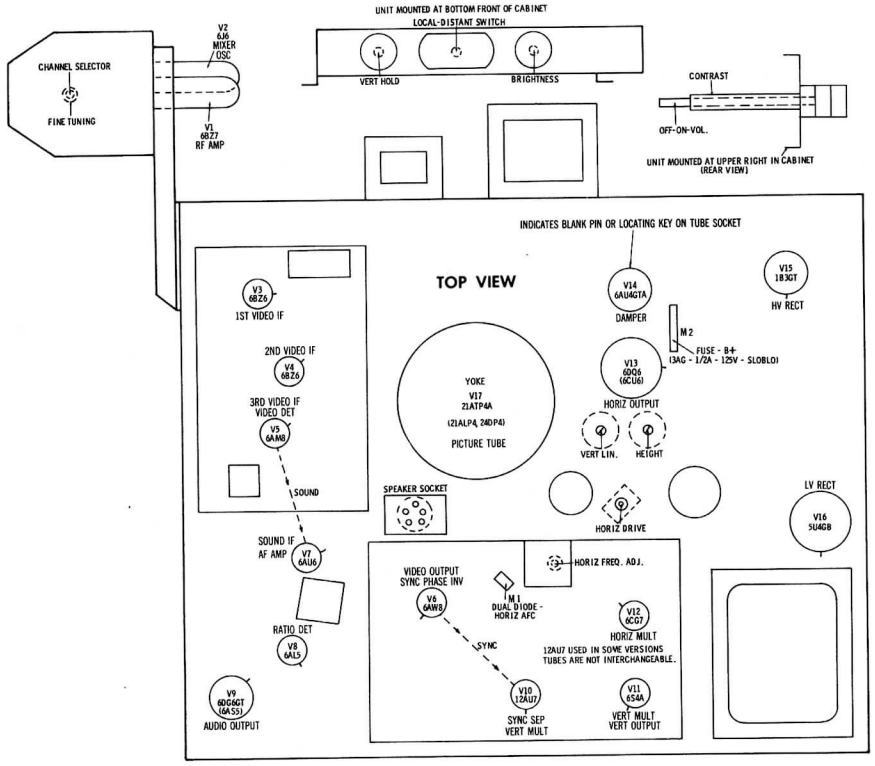

TUBE FAILURE CHECK CHART

The following chart lists tubes whose failures are most likely to produce the indicated symptoms. Refer to tube placement chart for location and type of tube.

POWER SUPPLY FAILURE
No raster, no sound - Fuse (M2), V16

LOSS OF PICTURE OR SOUND
No pic, no sound, has raster - V3, V4, V5, V9
No pic, no sound, has snow - V1, V2, V3, V9
No pic, has sound, has raster - V6, V17, V9
Has pic, no sound - V7, V8, V9

SYNC FAILURE
No vert. sync - V10, V6
No horiz. sync - V10, V6, Diode (M1)
No vert. or horiz. sync - V10, V6

SWEEP FAILURE
No raster, has sound - M1, V12, V13, V14, V15, V17, V9
No vertical deflection - V10, V11
Poor vert. linearity or foldover - V10, V11
Poor horiz. linearity or foldover - V12, V13, V14, V9
Narrow picture - V12, V13, V14, V9, V16
Vert. off freq. - V10, V11
Horiz. off freq. - V12

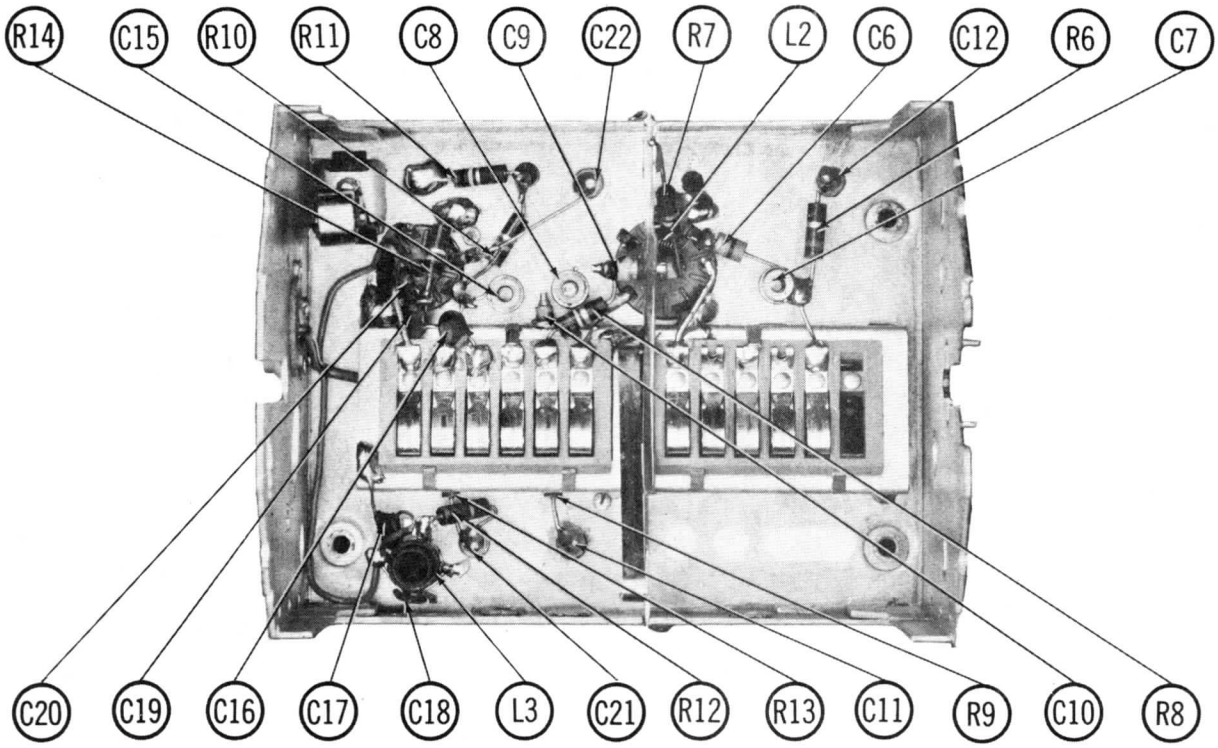

RF TUNER BOTTOM VIEW

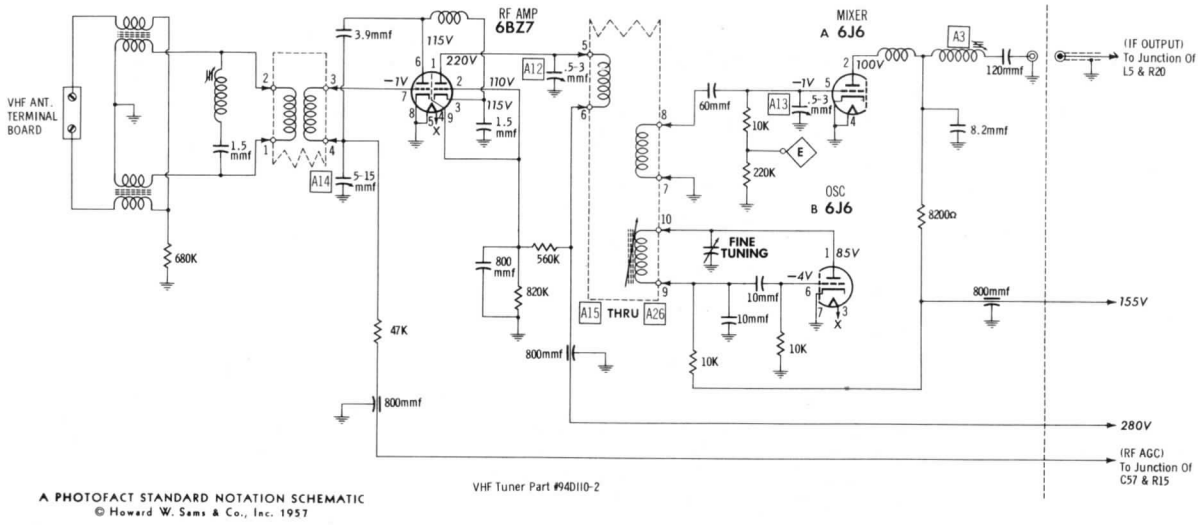

ALTERNATE VHF TUNER SCHEMATIC

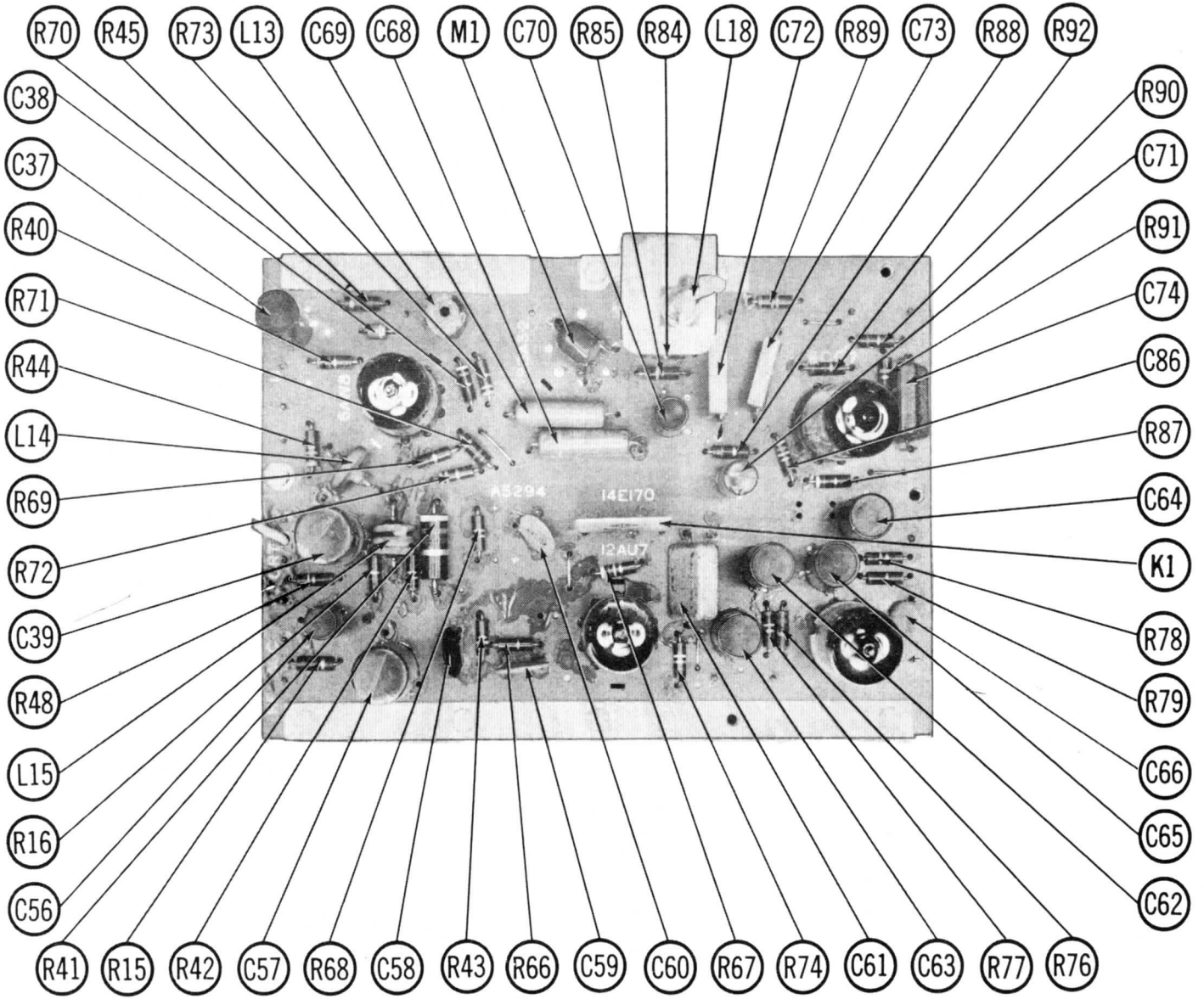

SYNC & SWEEP PRINTED BOARD

ADMIRAL CHASSIS 18Y4BSA, EFA, ESA, ESB, LSA, PSA,
18Z4ES, ESA, ESB, FS, FSA, FSB, LSA, PSA

ALIGNMENT INSTRUCTIONS

ALIGNMENT INSTRUCTIONS—READ CAREFULLY BEFORE ATTEMPTING ALIGNMENT

The High Voltage lead should be securely taped and kept away from the chassis.
Allow a 20 minute warm-up period for the receiver and test equipment.

VIDEO IF ALIGNMENT

Remove the mixer-osc. tube (V2) from its socket and replace with a 6J6 having pin 1 removed.
Disconnect antenna leads and connect a short jumper across the antenna terminals.
Turn the contrast control fully counter clockwise.
Connect the negative lead of a 3 volts bias supply to point Ⓐ. Positive to chassis.
For steps 1 and 2 use a strong signal from the generator but for all other steps, Use only enough generator output to provide usable indication on VTVM. Use lowest scale on VTVM.

	DUMMY ANTENNA	SIGNAL GENERATOR COUPLING	SIGNAL GENERATOR FREQUENCY	CHANNEL	CONNECT VTVM	ADJUST	REMARKS
1.	Direct	High side to an unground tube shield floating over dummy mixer-osc. tube. Low side to chassis.	21.25MC (Unmod)	Any non-interfering channel	DC probe thru decoupling network (Fig. 1) to point Ⓑ. Common to chassis.	A1	Adjust for MINIMUM deflection.
2.	"	"	27.25MC	"	"	A2	"
3.	"	"	22.6MC	"	"	A3	Adjust for maximum deflection.
4.	"	"	26.5MC	"	"	A4	"
5.	"	"	25.3MC	"	"	A5	"
6.	"	"	22.3MC	"	"	A6	"
7.	"	"	23.75MC	"	"	A7	"

OVERALL VIDEO IF RESPONSE CHECK

Connect bias as under "Video IF Alignment".
Connect the synchronized sweep voltage from the sweep generator to the horizontal input of the oscilloscope for horizontal deflection.
The sweep generator output lead should be terminated with its characteristic impedance, usually 50 ohms.
Use only enough sweep generator output to provide usable pattern on scope.

	DUMMY ANTENNA	SWEEP GENERATOR COUPLING	SWEEP GENERATOR FREQUENCY	MARKER GENERATOR FREQUENCY	CHANNEL	CONNECT SCOPE	ADJUST	REMARKS
8.	Direct	High side to ungrounded tube shield floating over dummy mixer-osc. tube. Low side to chassis.	23.0MC (10MC Swp)	21.25MC 22.0MC 23.0MC 25.0MC 25.75MC	Any non-interfering channel	Vert. Amp. thru decoupling network (Fig. 1) to point Ⓑ. Low side to chassis.		Check for response similar to Fig. 2. If necessary, retouch A1 thru A7 to obtain desired response. Adjust A4 and A5 for position of 25.75MC marker and amplitude of response curve on high frequency side. Adjust A3 and A6 for position of 22MC and 23MC markers and amplitude of response curve on low frequency side.

SOUND IF ALIGNMENT

Disconnect antenna and connect a short jumper across antenna terminals.
Set contrast control fully counter clockwise.

	DUMMY ANTENNA	SIGNAL GENERATOR COUPLING	SIGNAL GENERATOR FREQUENCY	CHANNEL	CONNECT VTVM	ADJUST	REMARKS
9.	.01MFD	High side to pin 8 (plate) of 6AM8 (V3). Low side to chassis.	4.5MC (Unmod)	Any non-interfering channel	DC probe to point Ⓒ. Common to chassis.	A8, A9	Use only enough generator output to provide usable indication on VTVM.
10.	"	"	"	"	DC probe to point Ⓓ. Common to chassis.	A10	Adjust for zero reading. A positive and negative reading will be obtained on either side of the correct setting.

4.5MC TRAP ALIGNMENT

	DUMMY ANTENNA	SIGNAL GENERATOR COUPLING	SIGNAL GENERATOR FREQUENCY	CHANNEL	CONNECT VTVM	ADJUST	REMARKS
11.	.01MFD	High side to pin 8 (plate) of 6AM8 (V5). Low side to chassis.	4.5MC (Unmod)	Any non-interfering channel	DC probe to point Ⓒ. Common to chassis.	A11	Connect a very short jumper across L11. Use lowest scale on VTVM. Adjust for MINIMUM deflection.

4.5MC TRAP ALIGNMENT USING ON THE AIR SIGNAL

Tune in a strong station and adjust the fine tuning until a beat pattern appears in the picture. Adjust A11 for MINIMUM beat pattern while observing the picture.

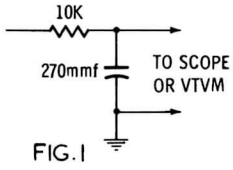

FIG.1

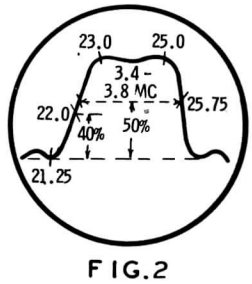

FIG.2

ALIGNMENT INSTRUCTIONS (cont)

RF AND MIXER ALIGNMENT

Connect bias as under "Video IF Alignment".
Allow a 20 minute warm-up period for the receiver and test equipment.
Connect the synchronized sweep voltage from the sweep generator to the horizontal input of the oscilloscope for horizontal deflection.
The sweep generator output lead should be terminated with its characteristic impedance, usually 50 ohms.
Use only enough sweep generator output to provide usable pattern on scope.

	DUMMY ANTENNA	SWEEP GENERATOR COUPLING	SWEEP GENERATOR FREQUENCY	MARKER GENERATOR FREQUENCY	CHANNEL	CONNECT SCOPE	ADJUST	REMARKS
12.	Two 120Ω Carbon Resistors	Across antenna terminals with 120Ω in each lead.	195MC (10MC Swp)	193.25MC 197.75MC	10	Vert. Amp. thru 10K to point (E). Low side to chassis.	A12, A13	Adjust for response curve similar to Fig. 3 with markers above 90%.
13.	"	"	85MC (10MC Swp)	83.25MC 97.75MC	6	"	A14	Adjust for response curve similar to Fig. 3. Adjust for maximum amplitude and flat-topped appearance with markers properly positioned.
14.	"	"	213MC (10MC Swp)	211.25MC 215.75MC	13	"		Check for response curve similar to Fig. 3. If markers fall below 70% on any high band channel, make compromise adjustment of A12 and A10 with channel switch set to that channel. If markers fall below 70% on any low band channel, make compromise adjustment of A14 with channel selector set to that channel. Check all other channels to see that they have not been seriously affected.
			207MC (10MC Swp)	205.25MC 209.75MC	12			
			201MC (10MC Swp)	199.25MC 203.75MC	11			
			189MC (10MC Swp)	187.25MC 191.75MC	9			
			183MC (10MC Swp)	181.25MC 185.75MC	8			
			177MC (10MC Swp)	175.25MC 179.75MC	7			
			79MC (10MC Swp)	77.25MC 81.75MC	5			
			69MC (10MC Swp)	67.25MC 71.75MC	4			
			63MC (10MC Swp)	61.25MC 65.75MC	3			
			57MC (10MC Swp)	55.25MC 59.75MC	2			

OSCILLATOR ALIGNMENT FOR TUNERS #94D100, -1, -2 & 94D110-2

Connect bias as under "Video IF Alignment".
Allow a 20 minute warm-up period for the receiver and test equipment.
Connect the synchronized sweep voltage from the sweep generator to the horizontal input of the oscilloscope for horizontal deflection.
The sweep generator output lead should ber terminated with its characteristic impedance, usually 50 ohms.
Use only enough sweep generator output to provide usable pattern on scope.

	DUMMY ANTENNA	SWEEP GENERATOR COUPLING	SWEEP GENERATOR FREQUENCY	MARKER GENERATOR FREQUENCY	CHANNEL	CONNECT SCOPE	ADJUST	REMARKS
15.	Two 120Ω Carbon Resistors	Across antenna terminals with 120Ω in each lead.	213MC (10MC Swp)	211.25MC 215.75MC	13	Vert. Amp. thru 47K to point (E). Low side to chassis.	A15	Adjust to place sound marker in trap notch as in Fig. 4. Video marker should fall at 50%.
			207MC (10MC Swp)	205.25MC 209.75MC	12		A16	
			201MC (10MC Swp)	199.25MC 203.75MC	11		A17	
			195MC (10MC Swp)	193.25MC 197.75MC	10		A18	
			189MC (10MC Swp)	187.25MC 191.75MC	9		A19	
			183MC (10MC Swp)	181.25MC 185.75MC	8		A20	
			177MC (10MC Swp)	175.25MC 179.75MC	7		A21	
			85MC (10MC Swp)	83.25MC 87.75MC	6		A22	
			79MC (10MC Swp)	77.25MC 81.75MC	5		A23	
			69MC (10MC Swp)	67.25MC 71.75MC	4		A24	
			63MC (10MC Swp)	61.25MC 65.75MC	3		A25	
			57MC (10MC Swp)	55.25MC 59.75MC	2		A26	

OSCILLATOR ALIGNMENT FOR TUNER #94E142-1

1. Turn the set on and allow 15 to 20 minute warm-up.
2. Set channel selector to the lowest channel operating in the area.
3. Set the fine tuning control to the center of its range.
4. Set other controls for normal picture and sound.
5. Remove channel selector, fine tuning knob and gold retainer disk, under the knobs, if used.
6. Using a 1/8" blade, non-metallic tool carefully adjust the channel slug for best picture and sound. (NOTE: This may not be point at which the sound is loudest). If two slugs are visable at the front of the tuner, adjust the top one. Repeat this procedure for the remaining stations, adjusting them in order of the channel number from the lowest to the highest.

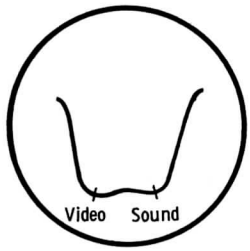

FIG. 3

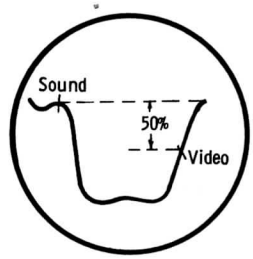

FIG. 4

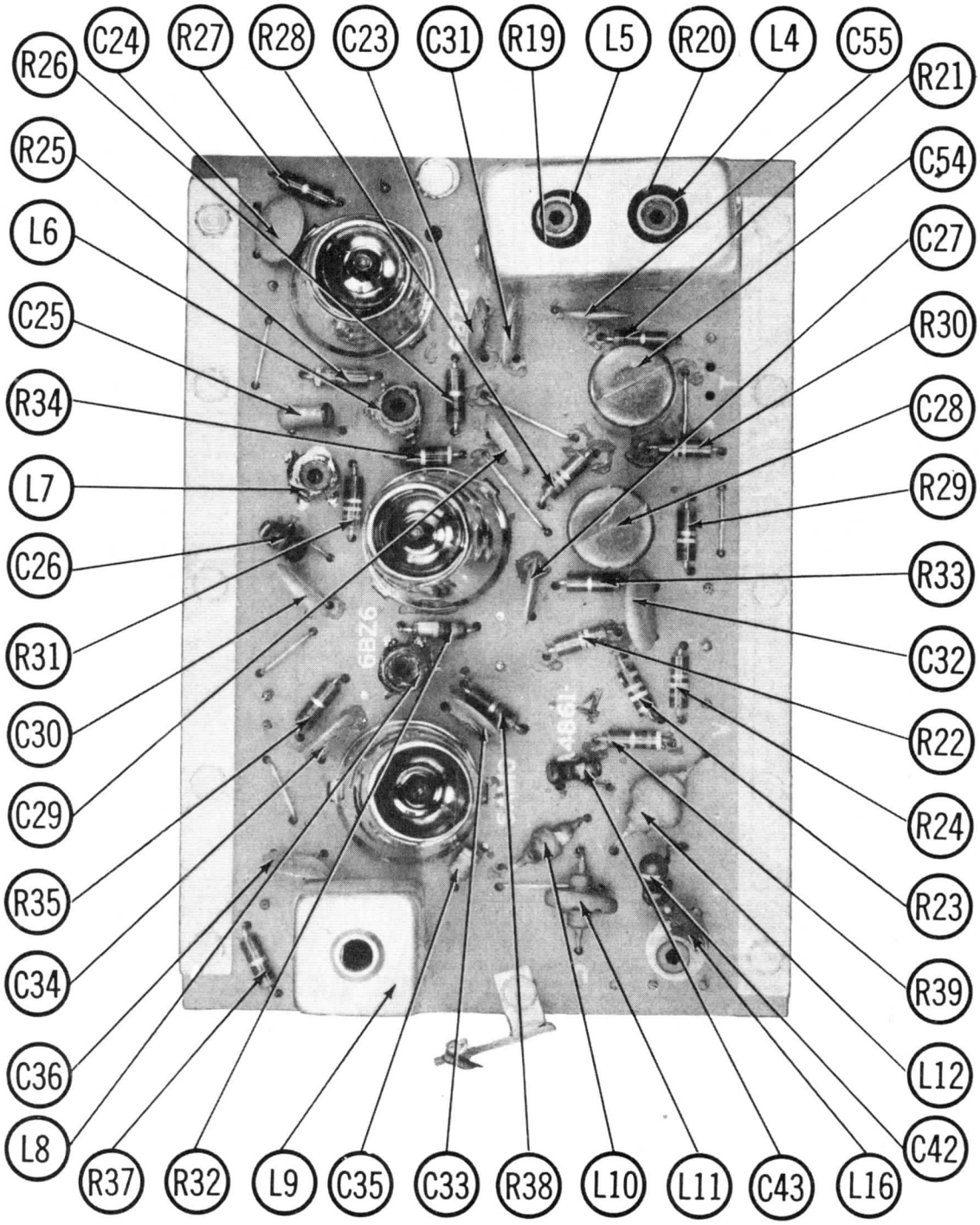

VIDEO IF PRINTED BOARD

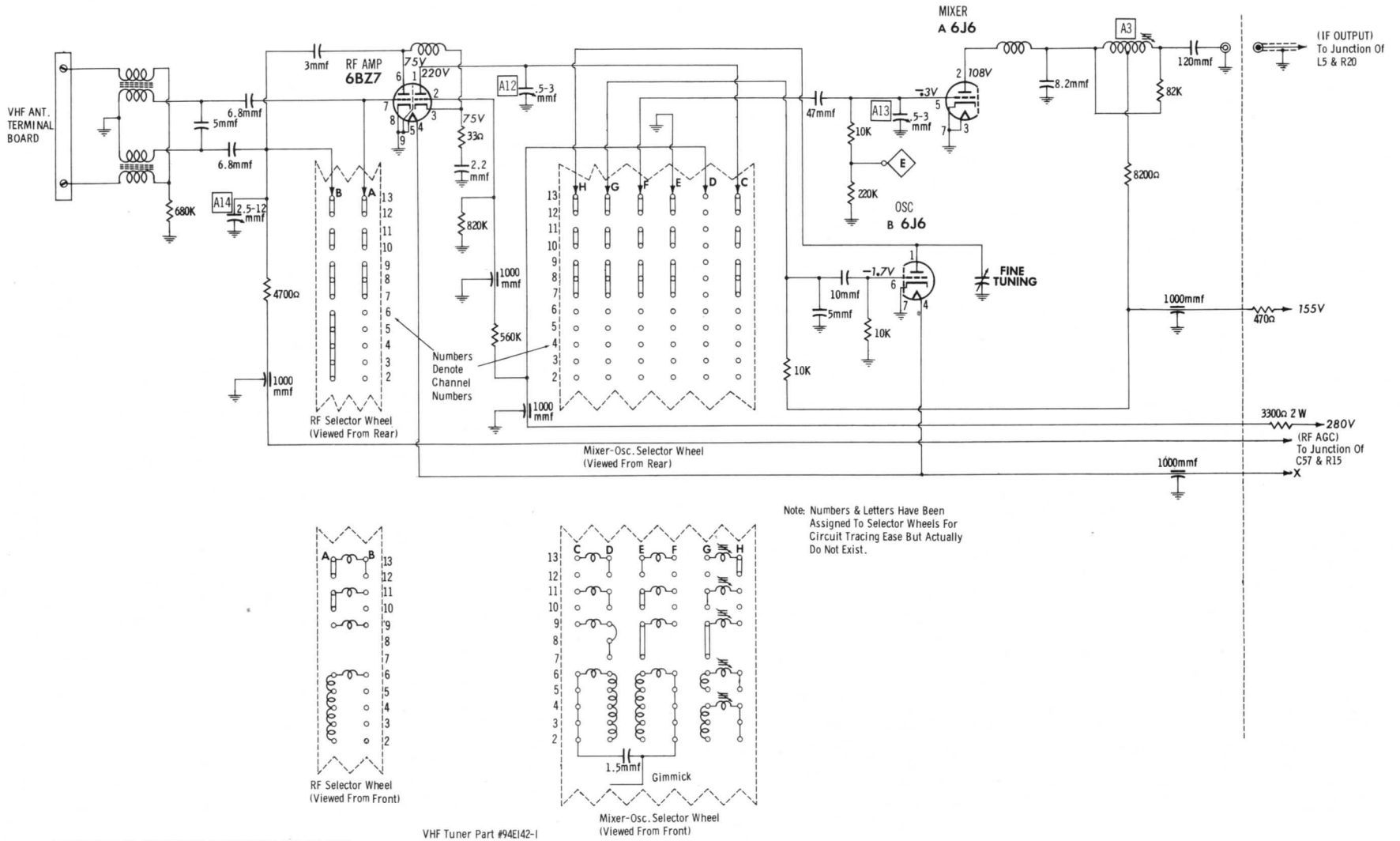

Note: Numbers & Letters Have Been Assigned To Selector Wheels For Circuit Tracing Ease But Actually Do Not Exist.

VHF Tuner Part #94E142-1

A PHOTOFACT STANDARD NOTATION SCHEMATIC

ALTERNATE VHF TUNER SCHEMATIC

ADMIRAL CHASSIS 18Y4BSA, EFA, ESA, ESB, LSA, PSA, 18Z4ES, ESA, ESB, FS, FSA, FSB, LSA, PSA

RESISTANCE MEASUREMENTS

ITEM	TUBE	Pin 1	Pin 2	Pin 3	Pin 4	Pin 5	Pin 6	Pin 7	Pin 8	Pin 9
V1	6BZ7	† 3500Ω	280K	INF	0Ω	.1Ω	INF	1.2Meg	0Ω	0Ω
V2	6J6	■ 10K	■ 8600Ω	0Ω	.1Ω	110K	10K	0Ω		
V3	6BZ6	280K	56Ω	0Ω	.1Ω	▲ 1000Ω	▲ 1000Ω	0Ω		
V4	6BZ6	† 100K	▲ 47Ω	.1Ω	0Ω	† 1000Ω	† 1000Ω	† 120K		
V5	6AM8	120Ω	.4Ω	■ 8000Ω	0Ω	.1Ω	■ 1000Ω	.3Ω	4200Ω	0Ω
V6	6AW8	3200Ω	1.4Meg	† 10K	.1Ω	0Ω	● 450Ω	1Meg	■ 30K	† 4700Ω
V7	6AU6	85K	0Ω	0Ω	.1Ω	† 27K	■ 330Ω	220Ω		
V8	6AL5	INF	INF	0Ω	.1Ω	10K	0Ω	10K		
V9	6DG6GT	NC	.1Ω	† 750Ω	† 525Ω	1Meg	TP	0Ω	¶	
V10	12AU7	‡ 3Meg	220K	● 200K	0Ω	0Ω	† 60K	2.2Meg	0Ω	.1Ω
V11	6S4A	NC	● 1500Ω	1.5Meg	0Ω	.1Ω	1.5Meg	NC	NC	‡ 10K
V12	6CG7	† 5700Ω	550K	1500Ω	0Ω	.1Ω	† 82K	150K	1500Ω	0Ω
V13	6DQ6	TP	.1Ω	TP	■ 1100Ω	470K	TP	0Ω	0Ω	TOP CAP ‡ 15Ω
V14	6AU4GTA	NC	NC	¶	NC	† 55Ω	NC	.1Ω	0Ω	
V15	1B3GT	PINS 1 THRU 8 HAVE INFINITE RESISTANCE								TOP CAP ‡ 515Ω
V16	5U4GB	NC	¶	NC	27Ω	NC	25Ω	NC	¶	
V17	21ATP4A	.1Ω	56K	Pin 6 ‡ 9000Ω	Pin 10 ‡ 9000Ω	Pin 11 ● 190K	Pin 12 0Ω			

† MEASURED FROM PIN 2 OF V16.
● THIS READING WILL VARY. CONTROL SET FOR NORMAL OPERATION
‡ MEASURED FROM PIN 3 OF V14.
■ MEASURED FROM PIN 8 OF V9.
▲ MEASURED FROM PIN 7 OF V4.
¶ THIS READING CAN VARY GREATLY, (10K MINIMUM), DUE TO THE CONDITION OF THE ELECTROLYTIC CAPACITOR CONNECTED IN THE ASSOCIATED CIRCUIT.
NC NO CONNECTION
TP TIE POINT

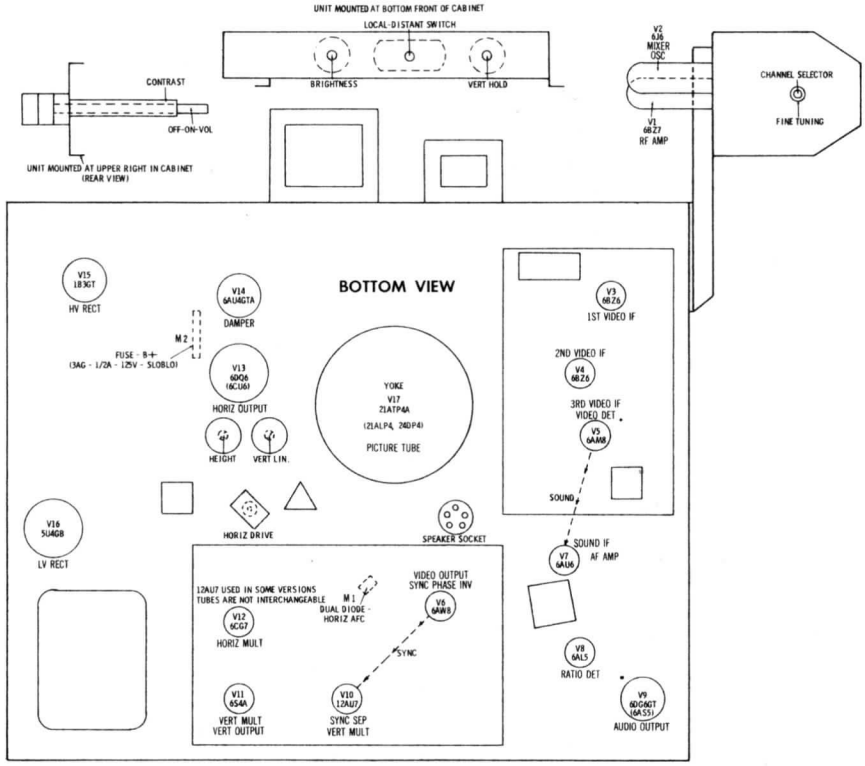

TUBE PLACEMENT CHART

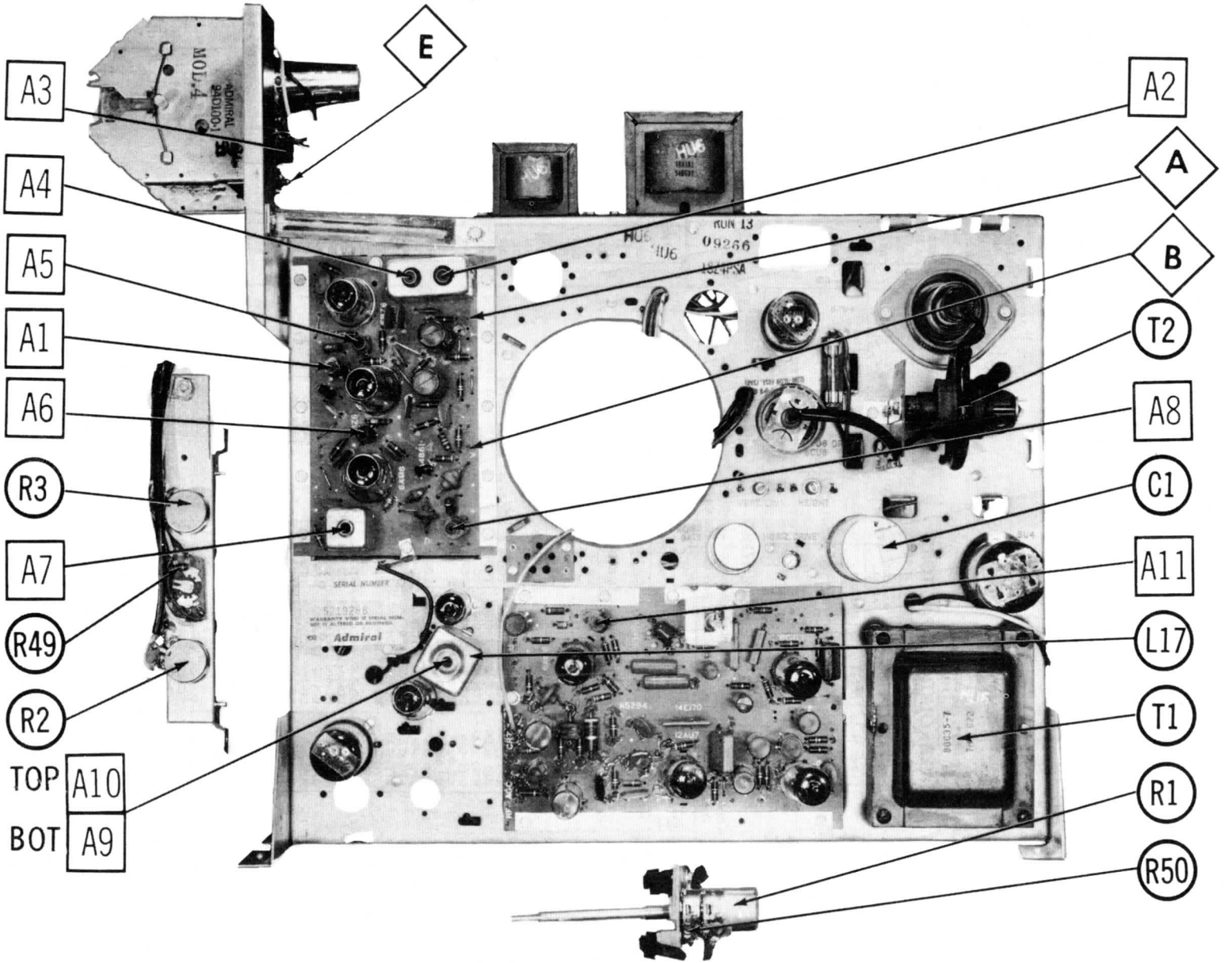

CHASSIS TOP VIEW

ADMIRAL CHASSIS 18Y4BSA, EFA, ESA, ESB, LSA, PSA,
18Z4ES, ESA, ESB, FS, FSA, FSB, LSA, PSA

PARTS LIST A

TUBES (GENERAL ELECTRIC, SYLVANIA)

ITEM No.	USE	TYPE	NOTES
V1	RF Amp.	6BZ7	
V2	Mixer-Osc.	6J6	
V3	1st Video IF Amp.	6BZ6	
V4	2nd Video IF Amp.	6BZ6	
V5	3rd Video IF Amp. - Video Det.	6AM8	
V6	Video Output- Sync Phase Inv.	6AW8	
V7	Sound IF Amp. -AF Amp.	6AU6	

Note 1: Some versions may use a 6AS5 in this application.
Note 2: Some versions may use a 12AU7 in this application.
NOTE: These tubes are NOT INTERCHANGEABLE.

ITEM No.	USE	TYPE	NOTES
V8	Ratio Det.	6AL5	
V9	Audio Output	6DG6GT	Note 1
V10	Sync Sep. -Vert. Mult.	12AU7	
V11	Vert. Mult. -Vert. Output	6S4A	
V12	Horiz. Mult.	6CG7	Note 2
V13	Horiz. Output	6DQ6	Note 3
V14	Damper	6AU4GTA	
V15	HV Rectifier	1B3GT	
V16	LV Rectifier	5U4GB	Note 4

Note 3: Some versions may use a 6CU6 in this application.
Note 4: Some versions may use a 5U4GA in this application.

PICTURE TUBE

ITEM No.	REPLACEMENT DATA				NOTES
	ADMIRAL PART No.	CBS PART No.	GENERAL ELECTRIC PART No.	SYLVANIA PART No.	
V17	21ATP4A	21ATP4 ②	21ATP4A/21ATP4②	21ATP4A/ 21ATP4 ① 21ATP4A ①	① Silver Screen "85" ② Aluminized
	21ALP4	21ALP4 21ALP4A ②	21ALP4 21ALP4B/21ALP4 A ②	21ALP4A/ 21ALP4B ①	
		21ALP4B ②			
	24DP4	24DP4A ②	24DP4 24DP4A ②	24DP4 24DP4A ①	

ELECTROLYTIC CAPACITORS

ITEM No.	RATING		REPLACEMENT DATA						
	CAP.	VOLT.	ADMIRAL PART No.	AEROVOX PART No.	CORNELL-DUBILIER PART No.	MALLORY PART No.	PYRAMID PART No.	SANGAMO PART No.	SPRAGUE PART No.
C1A	▲60	350	67D15-110	AFH3-29-25	DO044	FP330-9	TMD-89	D-177	TVL-2639
B	▲100	350						MT-4520	
C2A	▲5	200	67D15-109	AFH3-84-50	CO636	FP217.8		T-505	
B	■60	200				TC50X		MTD-2520	
C	20	50							
C3	4	50	67B27-3	PRS150V4	BBR4-50	TC30	TD-4-50	MT-0504	TVA-1402
C4	40	200	67A4-21	PRS250V40	BR4025	TC58	TD-40-250	FM-2540	TVA-1511
C5	10	500	67A4-22	PRS500V10	BR1250	TC82	TD-10-500	MT-5010	TVA-1963

FIXED CAPACITORS

Capacity values given in the rating column are in mfd. for Paper Capacitors, and in mmfd. for Mica and Ceramic Capacitors.

ITEM No.	RATING		REPLACEMENT DATA							NOTES
	CAP.	VOLT	ADMIRAL PART No.	AEROVOX PART No.	CENTRALAB PART No.	CORNELL-DUBILIER PART No.	ERIE PART No.	MALLORY PART No.	SPRAGUE PART No.	
C6	3		65B28-030	NP0-SI 3		C10V3C	TCO-3	ZT-553		
C7	2.5-12		66A38-5							
C8	.5-3		66A38-4		829-3		3115-D	CT565A		
C9	1000		65B26-5	EF-001	MFT-1000				503C-D1	
C10	1000		65B26-1	EF-001	MFT-1000				503C-D1	
C11	1000		65B26-5	EF-001	MFT-1000				503C-D1	
C12	1000		65B26-5	EF-001	MFT-1000				503C-D1	
C13	1.3		65B28-013	NP0-SI 1.0	TCZ-1		TCO-1		5TCCB-V1	
C14	1.0			NP0-SI 1.0	TCZ-1		TCO-1		5TCCB-V1	
C15	.5-3		66A38-4		829-3		3115-D	CT565A		
C16	47		65D10-73							N1400
C17	6.8		65D10-26	NP0-SI 6.8	TCZ-6R8	C10V68C	TCO-6.8	ZT-5568	5TCCB-V68	
C18	120			NP0-SI 120	TCZ-120	C10Q12C	TCO-120		5TCC-T12	Note 1 NP0
C19	10		65D10-50	N750-SI 10	TCN-10	C10Q1U	TC7-10	NT-541	5TCU-Q1	N750
C20	5		65D10-22	N750-SI 5	TCN-5	C10V5U	TC7-5	NT-555	5TCUB-V5	
C21	1000		65B26-5	EF-001	MFT-1000				503C-D1	
C22	1000		65B26-5	EF-001	MFT-1000				503C-D1	
C23	5000		65C43-1	BPD-005	DD-502	BYA10D5	ED-005	DC525	5HK-D5	
C24	5000		65C43-1	BPD-005	DD-502	BYA10D5	ED-005	DC525	5HK-D5	
C25	3.3		65C6-89	NP0-SI 3.3	TCZ-3R3	C10V33C	TCO-3.3	ZT-5533	5TCCB-V33	NP0
C26	22		65C6-113	NP0-SI 22	TCZ-22	C10Q22C	TCO-22		5TCC-Q22	NP0
C27	5000		65C43-1	BPD-005	DD-502	BYA10D5	ED-005	DC525	5HK-D5	
C28	.22	400	64B16-51	P488N-22		BC6P22J		ACE6022	4SE-P22	
C29	5000		65C43-1	BPD-005	DD-502	BYA10D5	ED-005	DC525	5HK-D5	
C30	5000		65C43-1	BPD-005	DD-502	BYA10D5	ED-005	DC525	5HK-D5	
C31	5000		65C43-1	BPD-005	DD-502	BYA10D5	ED-005	DC525	5HK-D5	
C32	10000		65C43-2	BPD-01	DD-103	BYA6S1	ED-01	DC511	5HK-S1	
C33	5000		65C43-1	BPD-005	DD-502	BYA10D5	ED-005	DC525	5HK-D5	
C34	5000		65C43-1	BPD-005	DD-502	BYA10D5	ED-005	DC525	5HK-D5	
C35	6.8		65B28-068	NP0-SI 6.8	TCZ-6R8	C10V68C	TCO-6.8	ZT-5568	5TCCB-V68	
C36	5000		65C43-1	BPD-005	DD-502	BYA10D5	ED-005	DC525	5HK-D5	
C37	.1	200	64B16-53	P288N-1	DF-104	BC6P15J		ACE401	2SE-P10	
C38	6.8		65B28-068	NP0-SI 6.8	TCZ-6R8	C10V68C	TCO-6.8	ZT-5568	5TCCB-V68	
C39	.22	400	64B16-28	P488N-22		BC6P22J		ACE6022	4SE-P22	
C40	.0068	600	64B9-14	P688N-0068	D6-682	CUB6D68	GP-6800	GEM-6268	6TM-D68	
C41	10000	1000	64A2-13							
C42	10		65C6-44	NP0-SI 10	TCZ-10	C10Q1C	TCO-10	ZT-541	5TCC-Q1	NP0
C43	20		65C6-51	NP0-SI 20	TCZ-20	C10Q2C	TCO-20	ZT-542	5TCC-Q2	NP0
C44	1000		65C39-1	BPD-001	DD-102	BYA6D1	ED-001	DC521	5HK-D1	
C45	5000		65C43-1	BPD-005	DD-502	BYA10D5	ED-005	DC525	5HK-D5	
C46	3000			BPD-003	DD-302	BYA10D3	ED-003	UC-5233		Note 2
C47	10000			BPD-01	DD-103	BYA6S1	ED-01	DC511	5HK-S1	
C48	180		65D10-52							N030
C49	500		65C39-3	BPD-0005	DD-501	L10T5	ED-500	UC-535	5GA-T5	
C50	.047	400	64B16-55	BPD-05	DD-503	CUB4S47		GEM-4147	4TM-S47	
C51	1000		64B16-42	BPD-001	DD-102	BYA6D1	ED-001	DC521	5HK-D1	
C52	10000		65C43-2	BPD-01	DD-103	BYA6S1	ED-01	DC511	5HK-S1	
C53	10000			BPD-01	DD-103	BYA6S1	ED-01	DC511	5HK-S1	Note 3
C54	.33	200	64B16-50	P288N-33		BC2P33J			2SE-P33	
C55	5000		65C43-1	BPD-005	DD-502	BYA10D5	ED-005	DC525	5HK-D5	
C56	.01	400	64B16-59	BPD-01	DD-103	BC6S1J	ED-01	ACE611	4SE-S10	
C57	.22	200	64B16-51	P288N-22		BC2P22J		ACE6022	2SE-P22	
C58	150			BPD-00015	DD-151	L10T15	ED-150	UC-5315	5GA-T15	
C59	10000		65C43-2	BPD-01	DD-103	BYA6S1	ED-01	DC511	5HK-S1	
C60	5000		65D10-5	BPD-005	DD-502	BYA10D5	ED-005	DC525	5HK-D1	
C61	2200		65B21-222	1464-0022		1R5D22	ED-0022		MS-222	
C62	.033	600	64B15-10	BPD-03	DF-303	BC6S33J			6SE-S33	
C63	.047	400	64B16-32	BPD-05	DF-503	BC6S47J		ACE6147	4SE-S47	
C64	.033	600	64B16-56	BPD-03	DF-303	BC6S33J			6SE-S33	
C65	.047	600	64B16-9	BPD-05	DF-503	BC6S47J		ACE6147	6SE-S47	
C66	10000		65C43-2	BPD-01	DD-103	BYA6S1	ED-01	DC511	5HK-S1	Note 5
C67	.001	1600	64A2-28	1688N-001		CUB16D1		GEM-1621	16TM-D1	
C68	.001	400	64B21-1	BPD-001	D6-102	CUB4D1	ED-001	GEM-421	4TM-D1	
C69	.001	400	64B21-1	BPD-001	D6-102	CUB4D1	ED-001	GEM-421	4TM-D1	

CAPA

ITEM No.	RATING		ADMIRAL PART No.	AEROVOX PART No.	CENTR PART
	CAP.	VOLT			
C70	.0047	600	64B16-38	BPD-0047	D6-4
C71	.015	400	64B16-58	BPD-015	
C72	3900		65B21-392	1464-0039	
C73	390		65B21-391	1464-00039	
C74	680		65B21-681	1464-00068	
C75	.0047	600		BPD-0047	D6-4
C76	170-780		66A30-3		
C77	.047	600	64B9-9	BPD-05	DF-5
C78	230	3000	65D10-69		
C79	150	3000	65D10-68		
C80	.047	1000	64A2-30	BPD-05	DF-5
C81	.1	600	64B9-7	P688N-1	DF-1

Note 1. Some versions use a 220MMF in this application
Note 2. In Ch. 18Z4ESB & FSB a 2000MMF is used in th
Note 3. In Ch. 18Y4BSA (Run 18 thru 19), 18Y4ESA, EFA
Note 4. In Ch. 18Y4BSA, ESA, EFA, PSA and LSA , C7
Note 5. Not used in early versions.

CO

ITEM No.	RATING		REPLACEM		
	RESIST-ANCE	WATTS	ADMIRAL PART No.	CENTRALAB PART No.	CLAR PAR
R1A	1000Ω	½	75B11-28	F1-5	RTV-
B	1Meg	½		R2-54	Not R
C	Switch			KB-1	Not R
R2A	200K	½	75D13-65	B-46	A47-2
B	Shaft			Not Req.	KSS-3
	200K	½	75C13-65	B-46	A47-2
	Shaft			Not Req.	KSS-3
R3A	100K	½	75D13-53	B-40	A47-1
B	Shaft			Not Req.	KSS-3
	100K	½	75C13-53	B-40	A47-1
	Shaft			Not Req.	KSS-3
R4A	3000Ω	½	75C20-7	B-8	A47-3
B	Shaft			Not Req.	FKS-½
R5A	2.5Meg	½	75C20-1	BX-83	A47-2.
B	Shaft			Not Req.	FKS-½

♦ Concentrikit Equivalent, Kit K-7, Base Elements & Shaf

① Alternate control used in some versions.

RES

All wattages 1/2 watt, or l

ITEM No.	RATING		REPLACEMENT DATA		NOTES
	OHMS	WATT	ADMIRAL PART No.	IRC PART No.	
R6	2700Ω			BTS-2700	
R7	820K			BTS-820K	
R8	560K			BTS-560K	
R9	120Ω			BTS-120	
R10	10K			BTS-10K	Note 1
R11	100K			BTS-100K	Note 2
R12	8200Ω			BTS-8200	
R13	10K			BTS-10K	Note 3
R14	10K			BTS-10K	
R15	1Meg				
R16	15Meg				
R17	3300Ω	2		BTB-3300	
R18	470Ω			BTS-470	
R19	47K 5%				
R20	1000Ω				
R21	1000Ω			BTS-1000	
R22	820K			BTS-820K	
R23	470K				
R24	270K				
R25	4700Ω 5%				Note 4
R26	1000Ω			BTS-1000	
R27	56Ω			BTS-56	
R28	27K			BTS-27K	
R29	220K			BTS-220K	
R30	220K				
R31	27K				
R32	10K 5%				
R33	1000Ω			BTS-1000	
R34	47Ω			BTS-47	
R35	1200Ω			BTS-1200	
R36	6800Ω			BTS-6800	Note 5
R37	1000Ω				
R38	120Ω			BTS-120	
R39	4700Ω			BTS-4700	
R40	100Ω			BTS-100	
R41	4700Ω	2		BTB-4700	
R42	15K			BTS-15K	
R43	270K			BTS-270K	
R44	30K 5%			BTS-30K 5%	
R45	1Meg			BTS-1Meg	
R46	56K			BTS-56K	
R47	2700Ω			BTS-2700	
R48	180K			BTS-180K	
R49	180Ω			BTS-180	
R50	470Ω			BTS-470	
R51	68K			BTS-68K	Note 5
R52	27K	2		BTB-27K	
R53	10K			BTS-10K	
R54	330Ω			BTS-330	

Note 1: A 6800Ω resistor may be used in some
Note 2: A 220K resistor may be used in some
Note 3: A 12K resistor may be used in some v
Note 4: Chassis 18Y4BSA, 18Y4ESA, 18Y4EFA,
Note 5: Not used in some versions.
Note 6: Chassis 18Y4BSA, 18Y4ESA, 18Y4EFA,
Note 7: Chassis 18Y4BSA, 18Y4ESA, 18Y4EFA,
Note 8: Chassis 18Y4BSA, 18Y4ESA, 18Y4EFA,
Note 9: Some versions may use a 3900Ω resis
Note 10: Some versions use a 120K resistor in
Note 11: Chassis 18Y4BSA, 18Y4ESA, 18Y4EFA,

PARTS LIST AND DESCRIPTIONS

CAPACITORS (cont)

ITEM No.	RATING CAP.	RATING VOLT	ADMIRAL PART No.	AEROVOX PART No.	CENTRALAB PART No.	CORNELL-DUBILIER PART No.	ERIE PART No.	MALLORY PART No.	SPRAGUE PART No.	NOTES
C70	.0047	600	64B16-38	BPD-0047	D6-472	BC6D47J	GP-4700	ACE6247	6SE-D47	
C71	.015	400	64B16-58	BPD-015		BC6S15J	ED-015		4SE-S15	
C72	3900		65B21-392	1464-0039		1R5D39			MS-239	
C73	390		65B21-391	1464-00039		5R5T39			MS-339	
C74	680		65B21-681	1464-00068		1R5T68			MS-368	
C75	.0047	600		BPD-0047	D6-472	CUB6D47	GP-4700	GEM-6247	6TM-D47	Note 4
C76	170-780		66A30-3							
C77	.047	600	64B9-9	BPD-05	DF-503	CUB6S47		GEM-6147	6TM-S47	
C78	230	3000	65D10-69							N1500
C79	150	3000	65D10-68							N1500
C80	.047	1000	64A2-30	BPD-05	DF-503	CUB10S47		GEM-10147	10TM-S47	
C81	.1	600	64B9-7	P688N-1	DF-104	CUB6P1		GEM-601	6TM-P1	

Note 1. Some versions use a 220MMF in this application.
Note 2. In Ch. 18Z4ESB & FSB a 2000MMF is used in this application - other versions may use a 1000MMF.
Note 3. In Ch. 18Y4BSA (Run 18 thru 19), 18Y4ESA, EFA, PSA and LSA a 4700MMF is used.
Note 4. In Ch. 18Y4BSA, ESA, EFA, PSA and LSA , C75 is not used.
Note 5. Not used in early versions.

CONTROLS

ITEM No.	RATING RESISTANCE	RATING WATTS	ADMIRAL PART No.	CENTRALAB PART No.	CLAROSTAT PART No.	IRC PART No.	MALLORY PART No.	INSTALLATION NOTES
R1A	1000Ω	½	75B11-28	F1-5	RTV-552	♦QJ-884	UE64S	Contrast
B	1Meg	½		R2-54	Not Req.	Not Req.	Not Req.	Volume
C	Switch			KB-1	Not Req.	Not Req.	Not Req.	
R2A	200K	½	75D13-65	B-46	A47-200K-S	Q11-129	U43	Vert. Hold
B	Shaft			Not Req.	KSS-3	Not Req.	Not Req.	
	200K	½	75C13-65	B-46	A47-200K-S	Q11-129	U43	Vert. Hold ①
	Shaft			Not Req.	KSS-3	Not Req.	Not Req.	
R3A	100K	½	75D13-53	B-40	A47-100K-S	Q13-128	U41	Brightness
B	Shaft			Not Req.	KSS-3	Not Req.	Not Req.	
	100K	½	75C13-53	B-40	A47-100K-S	Q13-128	U41	Brightness ①
	Shaft			Not Req.	KSS-3	Not Req.	Not Req.	
R4A	3000Ω	½	75C20-7	B-8	A47-3000-S	Q11-112	U8	Vert. Lin.
B	Shaft			Not Req.	FKS-½	RQ	Not Req.	
R5A	2.5Meg	½	75C20-1	BX-83	A47-2.5Meg-S	Q11-239	SU-565	Height
B	Shaft			Not Req.	FKS-½	RQ	Not Req.	

♦ Concentrikit Equivalent, Kit K-7, Base Elements & Shafts, B17-108 & P17-300 (Panel)
B13-137 & R2-318 (Rear)
76-1 Switch

① Alternate control used in some versions.

RESISTORS

All wattages 1/2 watt, or less, unless otherwise listed.

ITEM No.	RATING OHMS	RATING WATT	ADMIRAL PART No.	IRC PART No.	NOTES
R6	2700Ω			BTS-2700	
R7	820K			BTS-820K	
R8	560K			BTS-560K	
R9	120Ω			BTS-120	
R10	10K			BTS-10K	Note 1
R11	100K			BTS-100K	Note 2
R12	8200Ω			BTS-8200	
R13	10K			BTS-10K	Note 3
R14	10K			BTS-10K	
R15	1Meg				
R16	15Meg				
R17	3300Ω	2		BTB-3300	
R18	470Ω			BTS-470	
R19	47K 5%				
R20	1000Ω				
R21	1000Ω			BTS-1000	
R22	820K			BTS-820K	
R23	470K				
R24	270K				
R25	4700Ω 5%				Note 4
R26	1000Ω			BTS-1000	
R27	56Ω			BTS-56	
R28	27K			BTS-27K	
R29	220K			BTS-220K	
R30	220K				
R31	27K				
R32	10K 5%				
R33	1000Ω			BTS-1000	
R34	47Ω			BTS-47	
R35	1200Ω			BTS-1200	
R36	6800Ω			BTS-6800	Note 5
R37	1000Ω				
R38	120Ω			BTS-120	
R39	4700Ω			BTS-4700	
R40	100Ω			BTS-100	
R41	4700Ω	2		BTB-4700	
R42	15K			BTS-15K	
R43	270K			BTS-270K	
R44	30K 5%			BTS-30K 5%	
R45	1Meg			BTS-1Meg	
R46	56K			BTS-56K	
R47	2700Ω			BTS-2700	
R48	180K			BTS-180K	
R49	180Ω			BTS-180	
R50	470Ω			BTS-470	
R51	68K			BTS-68K	Note 5
R52	27K	2		BTB-27K	
R53	10K			BTS-10K	
R54	330Ω			BTS-330	

ITEM No.	RATING OHMS	RATING WATT	ADMIRAL PART No.	IRC PART No.	NOTES
R55	220Ω			BTS-220	
R56	10K			BTS-10K	
R57	10K			BTS-10K	
R58	390Ω			BTS-390	
R59	2200Ω			BTS-2200	
R60	39K			BTS-39K	
R61	47K			BTS-47K	
R62	100Ω			BTS-100	Note 6
R63	1Meg 5%			BTS-1Meg 5%	Note 7
R64	820K 5%			BTS-820K 5%	Note 8
R65	470Ω	2		BTB-470	
R66	2.2Meg			BTS-2.2Meg	
R67	47K			BTS-47K	
R68	220K			BTS-220K	
R69	2.2Meg			BTS-2.2Meg	
R70	4.7Meg			BTS-4.7Meg	
R71	6800Ω			BTS-6800	
R72	3300Ω			BTS-3300	
R73	3300Ω			BTS-3300	
R74	220K			BTS-220K	
R75	100K			BTS-100K	
R76	1.8Meg			BTS-1.8Meg	
R77	15K			BTS-15K	
R78	150K			BTS-150K	
R79	1.5Meg			BTS-1.5Meg	
R80	220K			BTS-220K	
R81	820Ω			BTS-820	
R82	560Ω				
R83	560Ω				
R84	100K 5%				
R85	100K 5%				
R86	470K				
R87	4.7Meg				
R88	5600Ω				
R89	82K				
R90	5600Ω				Note 9
R91	150K				Note 10
R92	1500Ω				
R93	15Ω	1			
R94	270Ω				
R95	100Ω				
R96	470K			BTS-470K	
R97	100Ω			BTS-100	
R98	1000Ω			BTS-1000	
R99	18K	2		BTB-18K	Note 11
R100	18K	2		BTB-18K	Note 5
R101	4.7Ω 5%			BW½-4.7 5%	
R102	270K			BTS-270K	Note 12

Note 1: A 6800Ω resistor may be used in some versions.
Note 2: A 220K resistor may be used in some versions.
Note 3: A 12K resistor may be used in some versions.
Note 4: Chassis 18Y4BSA, 18Y4ESA, 18Y4EFA, 18Y4PSA, 18Y4LSA may use a 12K resistor in this application.
Note 5: Not used in some versions.
Note 6: Chassis 18Y4BSA, 18Y4ESA, 18Y4EFA, 18Y4PSA & 18Y4LSA may use 150Ω in this application.
Note 7: Chassis 18Y4BSA, 18Y4ESA, 18Y4EFA, 18Y4PSA & 18Y4LSA may use 820K 5% in this application.
Note 8: Chassis 18Y4BSA, 18Y4ESA, 18Y4EFA, 18Y4PSA & 18Y4LSA may use 680K 5% in this application.
Note 9: Some versions may use a 3900Ω resistor in this application.
Note 10: Some versions use a 120K resistor in this application.
Note 11: Chassis 18Y4BSA, 18Y4ESA, 18Y4EFA, 18Y4PSA & 18Y4LSA may use a 5600Ω resistor in this application.

DESCRIPTIONS

RS (cont)

REPLACEMENT DATA				NOTES
RNELL-UBILIER RT No.	ERIE PART No.	MALLORY PART No.	SPRAGUE PART No.	
5D47J	GP-4700	ACE6247	6SE-D47	
S15J	ED-015		4SE-S15	
D39			MS-239	
T39			MS-339	
T68			MS-368	
36D47	GP-4700	GEM-6247	6TM-D47	Note 4
36S47		GEM-6147	6TM-S47	
				N1500
310S47		GEM-10147	10TM-S47	N1500
36P1		GEM-601	6TM-P1	

tion - other versions may use a 1000MMF.
d LSA a 4700MMF is used.
sed.

LS

A		
IRC PART No.	MALLORY PART No.	INSTALLATION NOTES
QJ-884	UE64S	Contrast
ot Req.	Not Req.	Volume
ot Req.	Not Req.	
11-129	U43	Vert. Hold
ot Req.	Not Req.	
11-129	U43	Vert. Hold ①
ot Req.	Not Req.	
13-128	U41	Brightness
ot Req.	Not Req.	
13-128	U41	Brightness ①
ot Req.	Not Req.	
11-112	U8	Vert. Lin.
Q	Not Req.	
11-239	SU-565	Height
Q	Not Req.	

8 & P17-300 (Panel)
37 & R2-318 (Rear)
-1 Switch

S

ss otherwise listed.

EM o.	RATING OHMS	RATING WATT	REPLACEMENT DATA ADMIRAL PART No.	REPLACEMENT DATA IRC PART No.	NOTES
55	220Ω			BTS-220	
56	10K			BTS-10K	
57	10K			BTS-10K	
58	390Ω			BTS-390	
59	2200Ω			BTS-2200	
60	39K			BTS-39K	
61	47K			BTS-47K	
62	100Ω			BTS-100	Note 6
63	1Meg 5%			BTS-1Meg 5%	Note 7
64	820K 5%			BTS-820K 5%	Note 8
65	470Ω	2		BTB-470	
66	2. 2Meg			BTS-2. 2Meg	
67	47K			BTS-47K	
68	220K			BTS-220K	
69	2. 2Meg			BTS-2. 2Meg	
70	4. 7Meg			BTS-4. 7Meg	
71	6800Ω			BTS-6800	
72	3300Ω			BTS-3300	
73	3300Ω			BTS-3300	
74	220K			BTS-220K	
75	100K			BTS-100K	
76	1. 8Meg			BTS-1. 8Meg	
77	15K			BTS-15K	
78	150K			BTS-150K	
79	1. 5Meg			BTS-1. 5Meg	
80	220K			BTS-220K	
81	820Ω			BTS-820	
82	560Ω				
83	560Ω				
84	100K 5%				
85	100K 5%				
86	470K				
87	4. 7Meg				
88	5600Ω				
89	82K				
90	5600Ω				Note 9
91	150K				Note 10
92	1500Ω				
93	15Ω	1			
94	270Ω				
95	100Ω				
96	470K			BTS-470K	
97	100Ω			BTS-100	
98	1000Ω			BTS-1000	
99	18K	2		BTB-18K	Note 11
00	18K	2		BTB-18K	Note 5
01	4. 7Ω 5%			BW½-4. 7 5%	
02	270K			BTS-270K	Note 12

8Y4LSA may use a 12K resistor in this application.

18Y4LSA may use 150Ω in this application.
18Y4LSA may use 820K 5% in this application.
18Y4LSA may use 680K 5% in this application.
application.
cation.
18Y4LSA may use a 5600Ω resistor in this application.

TRANSFORMER (POWER)

ITEM No.	RATING PRI.	RATING SEC. 1	RATING SEC. 2	RATING SEC. 3	REPLACEMENT DATA ADMIRAL PART No.	Halldorson PART No.	Merit PART No.	Stancor PART No.	Thordarson PART No.	Triad PART No.
T1	117VAC ⓐ1. 4A	560VCT ⓐ. 220A	5V ⓐ 3A	6. 3V ⓐ 9. 5A	80C35-7 ①	P9739 ③	P-3055 ④	P-8167 ⑤	26R90 ⑥	R-65BC
					80C35-1 ②	P9739 ③	P-3055 ④	P-8167 ⑤	26R90 ⑥	R-65BC

① Used in chassis 18Z4PSA, 18Z4ESA, 18Z4ES, 18Z4FS, 18Z4FSA, 18Z4LSA.
② Used in chassis 18Y4BSA, 18Y4ESA, 18Y4EFA, 18Y4PSA, 18Y4LSA.
③ Parallel & phase 6. 3V fil. windings. Tape 12. 6VCT fil. winding. Drill new mtg. holes.
④ Tape 6. 3V, 4. 5A fil. winding.
⑤ Parallel & phase 6. 3V fil. windings. Drill new mtg. holes.
⑥ Parallel & phase 6. 3V fil. windings.
⑦ Parallel & phase 6. 3V, 6A fil. windings. Tape 6. 3V, 1. 2A fil. winding.

TRANSFORMERS (SWEEP CIRCUITS)

ITEM No.	USE	REPLACEMENT DATA ADMIRAL PART No.	Halldorson PART No.	Merit PART No.	RCA TYPE No.	Ram PART No.	Stancor PART No.	Thordarson PART No.	Triad PART No.
T2	Horiz. Output Trans.	79D65-1	FB420* §	HVO-54*§		X129 *§	A-8292 *	FLY-77 *§	D-49 *§
T3	Vert. Output Trans.	79B43-4	Z1807 ①	A-2824①②		V312	A-8141	26S54	A-119X
T4A	Yoke(90°)Horiz.	94D87-13 ③	DF607⑧⑨	MDF-92⑧	235D1⑧⑨	Y90F19/43	DY-16A⑧	Y-16⑧⑨	Y-41 &
	(18. 5MH)	94B121-1 ④	⑩	⑨⑩	⑩	⑧⑨⑩	⑨⑩	⑩	NW1 ⑧⑨
	Vert. (38MH)	19A112-3 ⑤							YC1 ④
		94D87-8⑥⑦							CL1⑤

① Drill new mounting hole(s).
② Cut and tape yellow lead.
③ Includes resistors R82 and R83 .
④ Rear cover and centering device.
⑤ Yoke Clamp.
⑥ Alternate yoke used in Ch. 18Y4BSA, 18Y4ESA, 18Y4EFA, 18Y4PSA and 18Y4LSA (Run 14 thru 19).
⑦ Includes resistors R82, R83 and yoke plug (Part #88A18-3).
⑧ Use original horizontal damping network.
⑨ Loosen and rotate core clamp 180°. Connect same as original.
⑩ Use original rear cover and centering device.
§ This part may be superceded by Parts Manufacturer's introduction of special unit in this application.

*HORIZONTAL OUTPUT TRANSFORMER CONNECTION DATA

Use Original Width Coil Unless Replacement Type Is Listed

	ORIGINAL TERMINAL CONNECTIONS	Halldorson Replacement Connections	Merit Replacement Connections	RCA Replacement Connections	Ram Replacement Connections	Stancor Replacement Connections	Thordarson Replacement Connections	Triad Replacement Connections
	5	5	5		5	5	4	5
	6	2	4		4	6	3	6
	8	1	1		1	8	1	2
Special Notes →		⑪	⑪		⑪	⑪	⑪	⑪

⑪ Filament winding requires two turns.

TRANSFORMER (AUDIO OUTPUT)

ITEM No.	IMPEDANCE PRI.	IMPEDANCE SEC.	REPLACEMENT DATA ADMIRAL PART No.	Halldorson PART No.	Merit PART No.	Stancor PART No.	Thordarson PART No.	Triad PART No.	NOTES
T5	2500Ω	3-4Ω	79B66-1 ① 79B66-2 ② 79B66-3 ③	Z1103④⑤	Z-2928④	A-3876④	22S45 ④	S-1X ④	① Used with speaker part #78D111-4. ② Used with speaker part no's. 78D119-2 & 78B105-1. ③ Used with speaker part #78D118-1. ④ Bend ears down. ⑤ Tape tap on primary winding.

SPEAKER

ITEM No.	TYPE SIZE	TYPE FIELD	TYPE V. C. IMP.	REPLACEMENT DATA ADMIRAL PART No.	QUAM PART No.	NOTES
SP1⑥	6"	PM	3-4Ω	78D111-4①	6A1	
	8"	PM	3-4Ω	78D119-2 ②	8A21	
	4"	PM	3-4Ω	78B105-1 ③	4A07	
	8"	PM		78D118-1 ④		
	8"	PM		78D118-2 ⑤		

① Includes speaker plug & audio output trans. Used in all versions of chassis 18Z4PSA & some versions of chassis 18Z4ES, 18Z4FS, 18Z4FSA, 18Z4ESB, 18Z4FSB.
② Includes speaker plug & audio output trans. Used in all versions of chassis 18Z4ESA & some versions of chassis 18Z4ES, 18Z4FS, 18Z4FSA, 18Z4ESB, 18Z4FSB.
③ Includes speaker plug & audio output trans. Used in all versions of chassis 18Z4LSA & some versions of chassis 18Z4ESB, 18Z4FSB.
④ Includes speaker plug & audio output trans. Used in some versions of chassis 18Z4PSA, 18Z4ESA, 18Z4ES, 18Z4FS, 18Z4FSA, 18Z4LSA, 18Z4ESB, 18Z4FSB.
⑤ Used in some versions of chassis 18Z4PSA, 18Z4ESA, 18Z4ES, 18Z4FS, 18Z4FSA, 18Z4LSA, 18Z4ESB, 18Z4FSB.
⑥ In chassis 18Y4BSA, 18Y4ESA, 18Y4EFA, 18Y4PSA, 18Y4LSA check part # stamped on the speaker; these part numbers include L19, speaker plug & audio output trans.

COILS (RF-IF)

ITEM No.	USE	ADMIRAL PART No.	NOTES
L1A	Ant., RF, Mixer Grid, Osc. Coils	AC305	Channels 2, 3, 4
B	Ant., RF, Mixer Grid, Osc. Coils	AC306	Channels 5, 6
C	Ant., RF, Mixer Grid, Osc. Coils	AC307	Channels 7, 8, 9

ITEM No.	USE	ADMIRAL PART No.	NOTES
L1D	Ant., RF, Mixer Grid, Osc. Coils	AC308	Channels 10, 11
E	Ant., RF, Mixer Grid, Osc. Coils	AC309	Channels 12, 13
L2	Neutr. Coil	73A2-9	
L3	Mixer Plate Coil	72A-151	

ITEM No.	USE	REPLACEMENT DATA ADMIRAL PART No.	MEISSNER PART No.	MERIT PART No.	MILLER PART No.	NOTES
L4	27. 25MC Trap	72C132-5				
L5	1st Video IF	72C132-6				
L6	2nd Video IF	72C132-4				
L7	21. 25MC Trap	72C132-3				
L8	3rd Video IF	72C132-2				
L9	4th Video IF	72B152-2				Includes . 005MFD Cap.

PARTS LIST AND DESCRIPTIONS (Continued)

COILS (cont)

ITEM No.	USE	REPLACEMENT DATA				NOTES
		ADMIRAL PART No.	MEISSNER PART No.	MERIT PART No.	MILLER PART No.	
L10	Series Peaking Coil	73A24-2	19-3036	TV-180	6176	35 Microhenries
L11	Series Peaking Coil	73B5-26	19-3180*	TV-184*	6180*	188 Microhenries; Wound on 4700Ω resistor.
L12	Shunt Peaking Coil	73B5-25	19-3500		6174	505 Microhenries
L13	4.5MC Trap	72C132-1				
L14	Series Peaking Coil	73B5-14	19-3250▲	TV-185▲	6181▲	254 Microhenries; Wound on 18K resistor.
L15	Shunt Peaking Coil	73A11-1			6156■	790 Microhenries; Wound on 10K resistor.
L16	Sound IF	72C132-1				
L17	Ratio Det.	72C68-2	17-1033	TV-110	1498	Tertiary winding = .7Ω

* Parallel with 4700Ω resistor.
▲ Parallel with 18K resistor.
■ Parallel with 10K resistor.

TRANSFORMER (HORIZ. OSC.)

ITEM No.	DC RES.		REPLACEMENT DATA							NOTES
	PRI.	SEC.	ADMIRAL PART No.	MEISSNER PART No.	MERIT PART No.	MILLER PART No.	RCA TYPE No.	Ram PART No.	Thordarson PART No.	
L18	53Ω	"	94C17-4		TV-164					

FILTER CHOKE

ITEM No.	RATINGS			REPLACEMENT DATA					
	TOTAL DIRECT CURRENT	D. C. RESISTANCE	INDUCTANCE (0 CURRENT 1000 ∿)	ADMIRAL PART No.	Halldorson PART No.	Merit PART No.	Stancor PART No.	Thordarson PART No.	Triad PART No.
L19	.220A	55Ω	1.3HY	74B18-13	C5037 ①	C-2996①	C-2326①	26C44 ①	C-24X

① Drill one new mounting hole.

COMPONENT COMBINATIONS

ITEM No.	USE	DESCRIPTION	ADMIRAL PART No.	REPLACEMENT DATA	
K1	Vertical Intergrator	2000MMF, 5000MMF, 5000MMF, 22K, 8200Ω, 8200Ω	63C9-1	Aerovox Centralab Cornell-Dubilier Erie Sprague	PA-110 PC-100 115TM1 1405-01 V-1

RECTIFIERS

ITEM No.	RATING	REPLACEMENT DATA						
	CURRENT (Measured)	ADMIRAL PART No.	FEDERAL PART No.	GENERAL ELECTRIC PART No.	INTERNATIONAL PART No.	MALLORY PART No.	RADIO RECEPTOR PART No.	SARKES TARZIAN PART No.
M1		93A5-2 ①③	1215 ①②		1T1 ①②			

① Selenium type, horiz. phase detector.
② 2 Required.
③ Used in chassis 18Z4ESB, 18Z4FSB stamped run 10-13; chassis 18Y4LSA, 18Y4EFA, 18Y4PSA stamped run 19 and higher; chassis 18Y4BSA stamped run 18; chassis 18Z4ESA, 18Z4PSA, 18Z4ES, 18Z4FS, 18Z4FSA, 18Z4LSA stamped run 10-13; (chassis 18Z4ESB, 18Z4FSB stamped run 14; chassis 18Y4ESA stamped run 18 & lower; chassis 18Y4BSA stamped run 19; chassis 18Z4ESA, 18Z4PSA, 18Z4ES, 18Z4FS, 18Z4FSA, 18Z4LSA stamped run 14 use 6AL5 tube in this application).

FUSES

ITEM No.	TYPE	RATING	REPLACEMENT DATA					
			ADMIRAL PART No.		LITTELFUSE PART No.		BUSS PART No.	
			FUSE	HOLDER	FUSE	HOLDER	FUSE	HOLDER
M2	3AG	1/2A 125V S/B	84A1-3*	64A5-4	313.500 (3AG-½A-S/B)	357001	MDL 1/2	4405

* Not used in early versions.

MISCELLANEOUS

ITEM No.	PART NAME	ADMIRAL PART No.	NOTES
M3	Dial Light	81A1-12	#51-Not used in some versions.
M4	Tuner	94D100-1	VHF, Used in chassis 18Z4PSA.
	Tuner	94D100	VHF, Used in chassis 18Y4ESA, EFA, PSA, LSA, BSA(Run 18, 19)
	Tuner	94D100-2	VHF, Used in chassis 18Z4ESA, FSA, LSA, PSA.
	Tuner	94E142-1	VHF, Used in chassis 18Z4ESB, FSB stamped run 13-15.
	Tuner	94D110-2	VHF, Used in chassis 18Z4ES, FS.
M5	Ant. Matching Network	AB313	Includes Coils and Caps.
M6	Switch	76A31-1	Local-Distance, Rotary Wafer Type.
M7	Centering Device	94B121-1	Includes Rear Yoke Cover.
M8	Ion Trap	94A15-4	
	Yoke Clamp	19A112-3	
	Printed Board	A4861-4	Video IF
	Printed Board	A5294	Sync, Used with 6CG7, Alt. part #A4864-2 used with 12AU7.
	Focus Jumper	18A134	
	Sync Couplate	63C64	Not used in some versions.

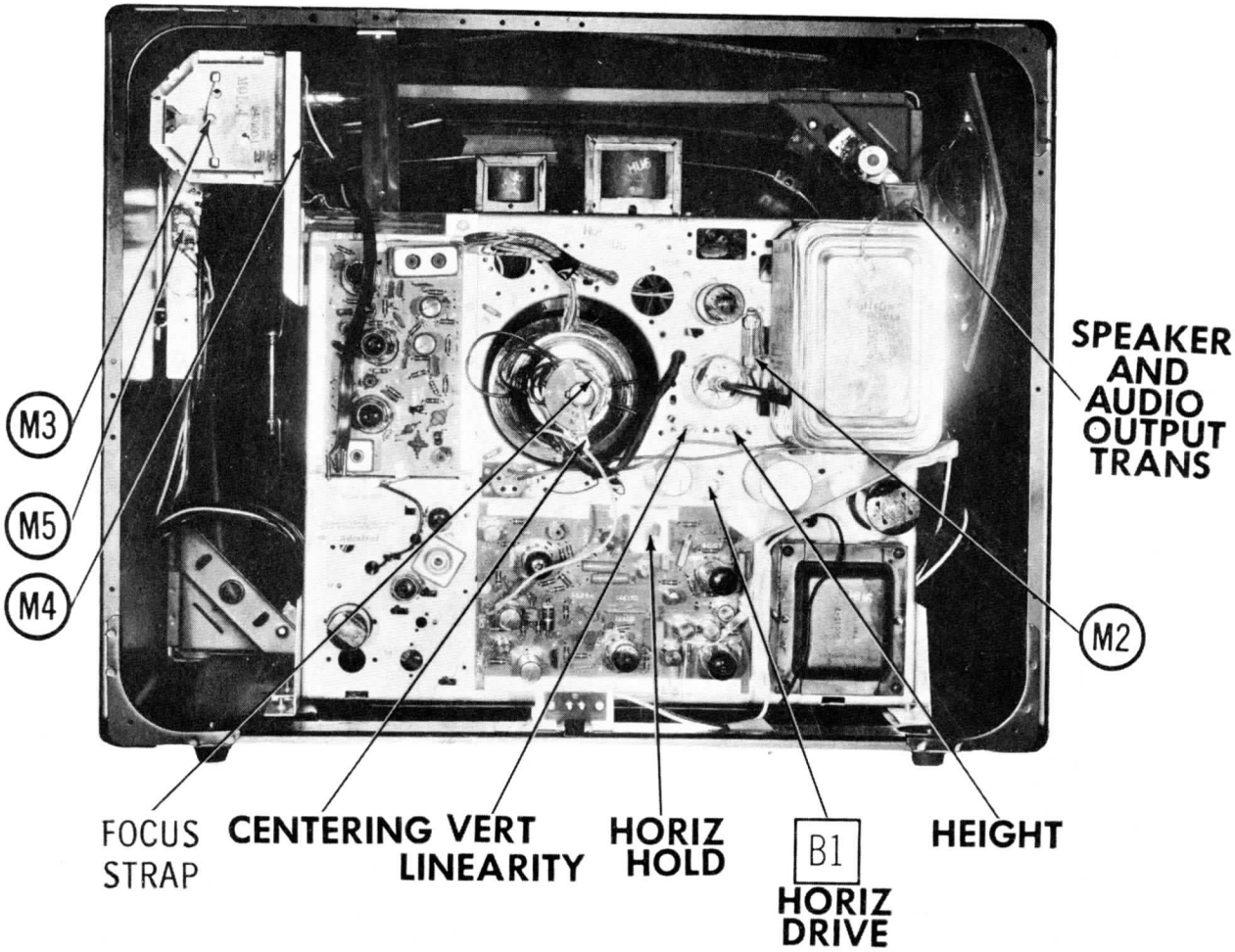

CABINET—REAR VIEW

HORIZONTAL SWEEP CIRCUIT ADJUSTMENTS

1. Turn the set on and tune in a TV station, preferably with a test pattern.

2. Set the brightness and contrast controls for a normal picture.

3. Turn the horizontal hold clockwise until the picture loses sync. It may be necessary to switch off channel and back again for picture to lose sync.

4. Turn the horizontal hold slowly counter clockwise until the picture just falls into sync.

5. Turn to an unused channel. If vertical lines appear near the center of the screen, slowly adjust the horizontal drive trimmer (B1) until white lines disappear.

6. If in step 5 the horizontal drive was adjusted, tune in a TV station and repeat steps 3 and 4. Check horizontal sync by switching off channel and back again.

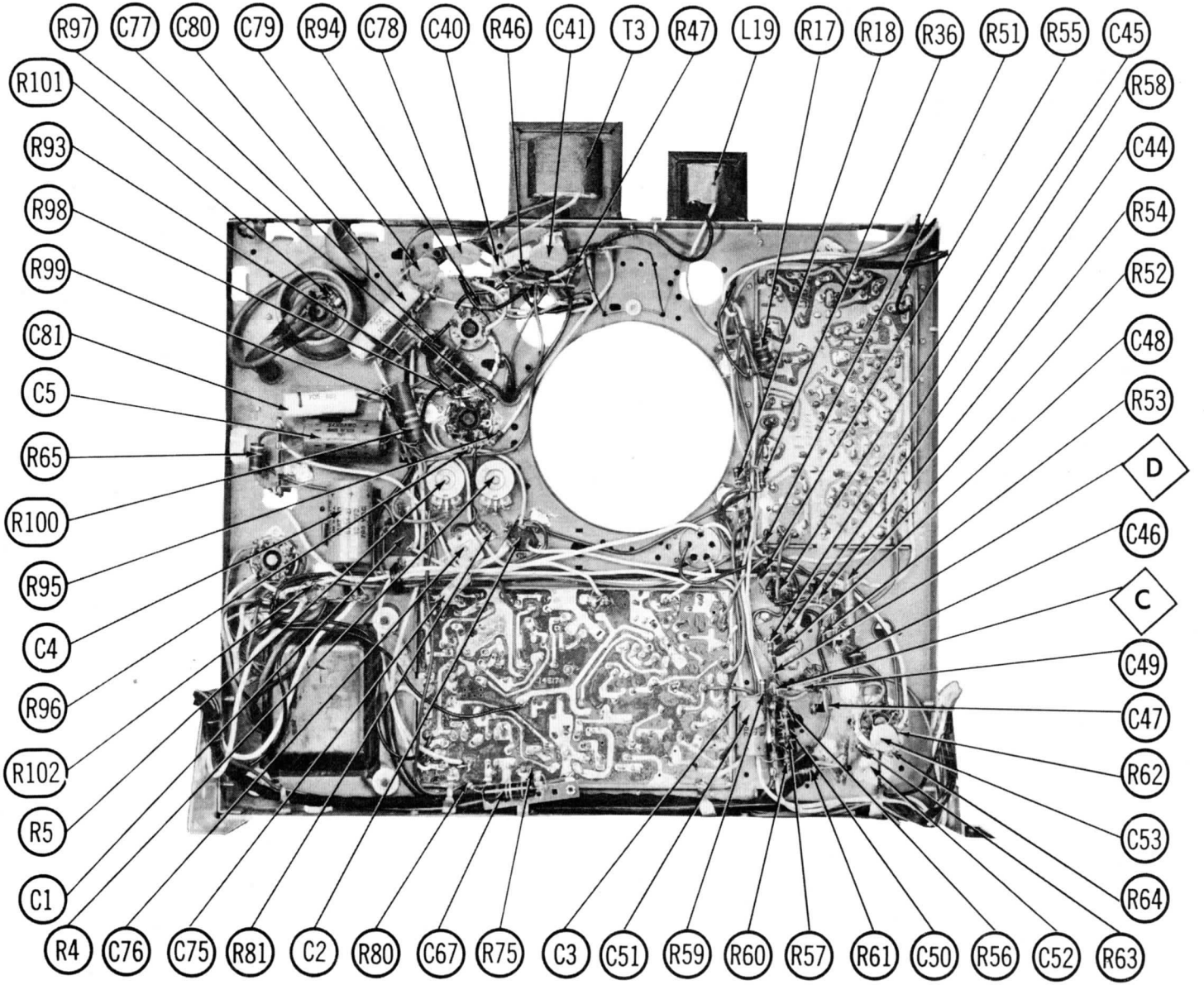

CHASSIS BOTTOM VIEW