PHOTOFACT* Folder

*TRADE MARK

EMERSON MODELS

662-B (CH. 120127-B), 663-B (CH. 120128-B)

IMPORTANT FILING NOTICE

The contents for this envelope will be found among the last folders in this complete set of folders . . . *unless* it has been purchased as part of a *complete* volume of PHOTOFACTS assembled in a DeLuxe Binder.

Merely insert the corresponding folder on this model in this envelope to retain proper filing and indexing order.

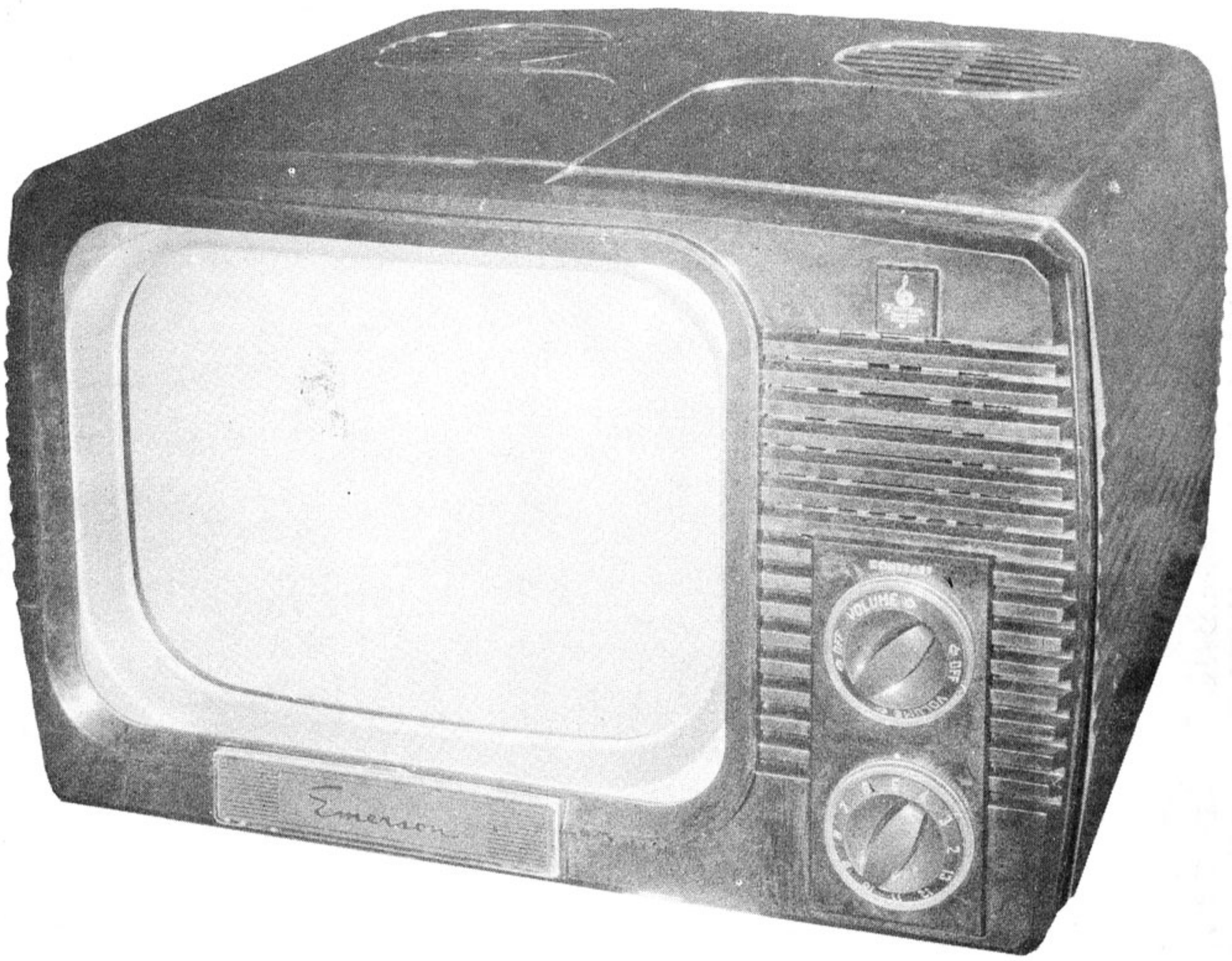

EMERSON MODELS
662-B (CH. 120127-B), 663-B
(CH. 120128-B)

MODEL 662-B

HOWARD W. SAMS & CO., INC. • Indianapolis, Indiana

"The listing of any available replacement part herein does not constitute in any case a recommendation, warranty or guaranty by Howard W. Sams & Co., Inc., as to the quality and suitability of such replacement part. The numbers of these parts have been compiled from information furnished to Howard W. Sams & Co., Inc., by the manufacturers of the particular type of replacement part listed." "Reproduction or use, without express permission, of editorial or pictorial content, in any manner, is prohibited. No patent liability is assumed with respect to the use of the information contained herein. Copyright 1951 by Howard W. Sams & Co., Inc., Indianapolis, Indiana, U.S.A. Copyright under International Copyright Union. All rights reserved under Inter-American Copyright Union (1910) by Howard W. Sams & Co., Inc."

Printed in U. S. of America

Date 2/51 Set No. 125—Folder No. 6

PHOTOFACT* Folder

*TRADE MARK

EMERSON MODELS 662-B (Ch. 120127-B), 663-B (Ch. 120128-B)

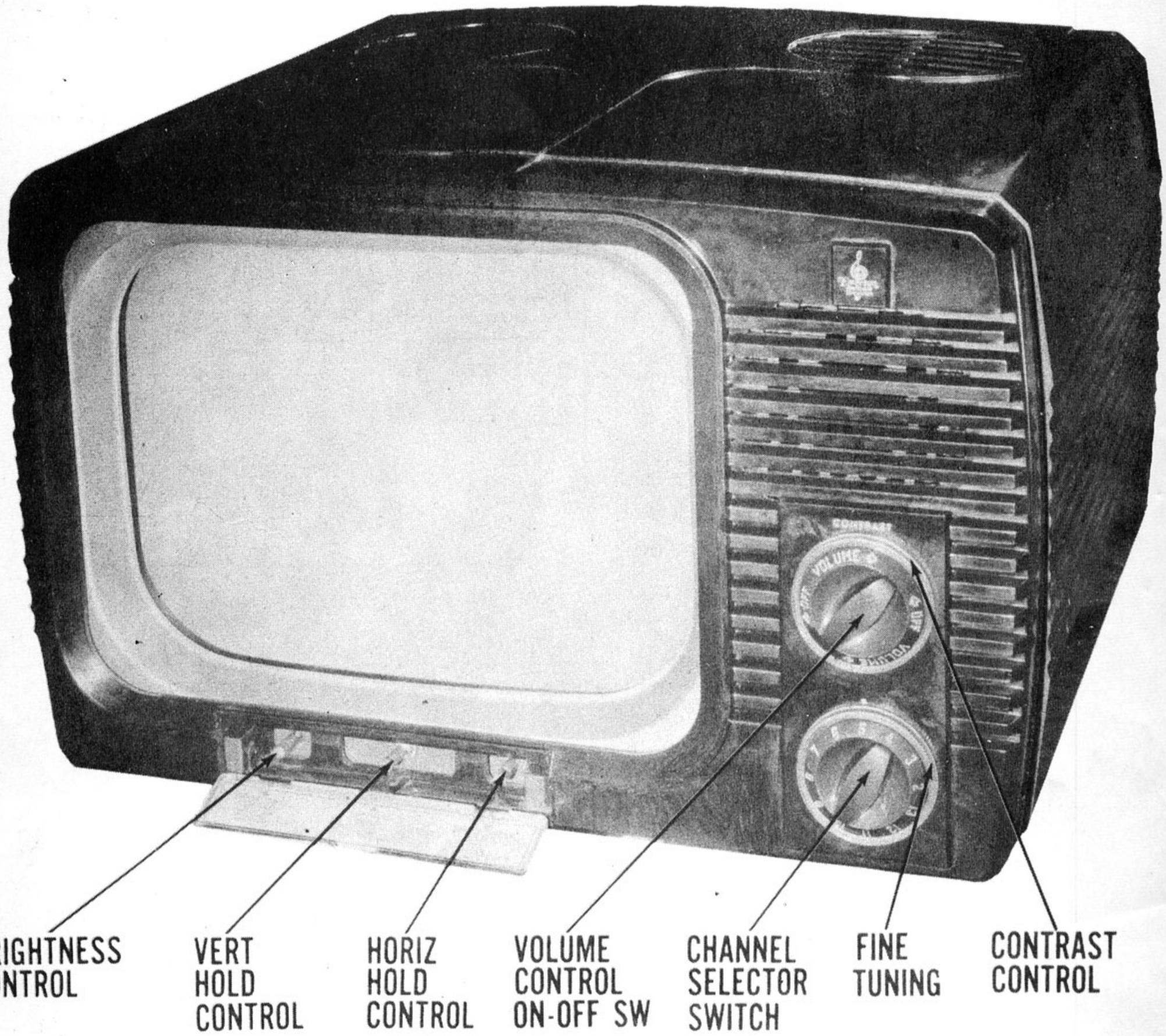

EMERSON MODELS 662-B (Ch. 120127-B), 663-B (Ch. 120128-B)

EMERSON MODEL 662-B

TRADE NAME	Emerson Models 662-B (Ch. 120127-B), 663-B (Ch. 120128-B)
MANUFACTURER	Emerson Radio And Phono Corp., 111 Eighth Ave., New York (11), N. Y.
TYPE SET	Television Receiver
TUBES	Twenty One
POWER SUPPLY	110-120 Volts AC - 60 Cycle — RATING 1.7 Amp. @ 117 Volts AC
TUNING RANGE	Channels 2 thru 13

INDEX

Alignment Instructions 6, 7

Horizontal Sweep Circuit Adjustments 11

Parts List And Description 12, 13, 14

Photographs
- Cabinet - Rear View 11
- Capacitor And Alignment Identifications 4, 9
- Chassis - Top View 3
- Photographs (Continued)
- RF Tuner 10
- Resistor And Inductor Identifications 15, 16

Schematic 2

Tube Placement Chart 5

Voltage And Resistance Measurements 8

HOWARD W. SAMS & CO., INC. • Indianapolis 1, Indiana

"The listing of any available replacement part herein does not constitute in any case a recommendation, warranty or guaranty by Howard W. Sams & Co., Inc., as to the quality and suitability of such replacement part. The numbers of these parts have been compiled from information furnished to Howard W. Sams & Co., Inc., by the manufacturers of the particular type of replacement part listed." "Reproduction or use, without express permission, of editorial or pictorial content, in any manner, is prohibited. No patent liability is assumed with respect to the use of the information contained herein. Copyright 1950 by Howard W. Sams & Co., Inc., Indianapolis 1, Indiana, U. S. of America. Copyright under International Copyright Union. All rights reserved under Inter-American Copyright Union (1910) by Howard W. Sams & Co., Inc." Printed in U. S. of America

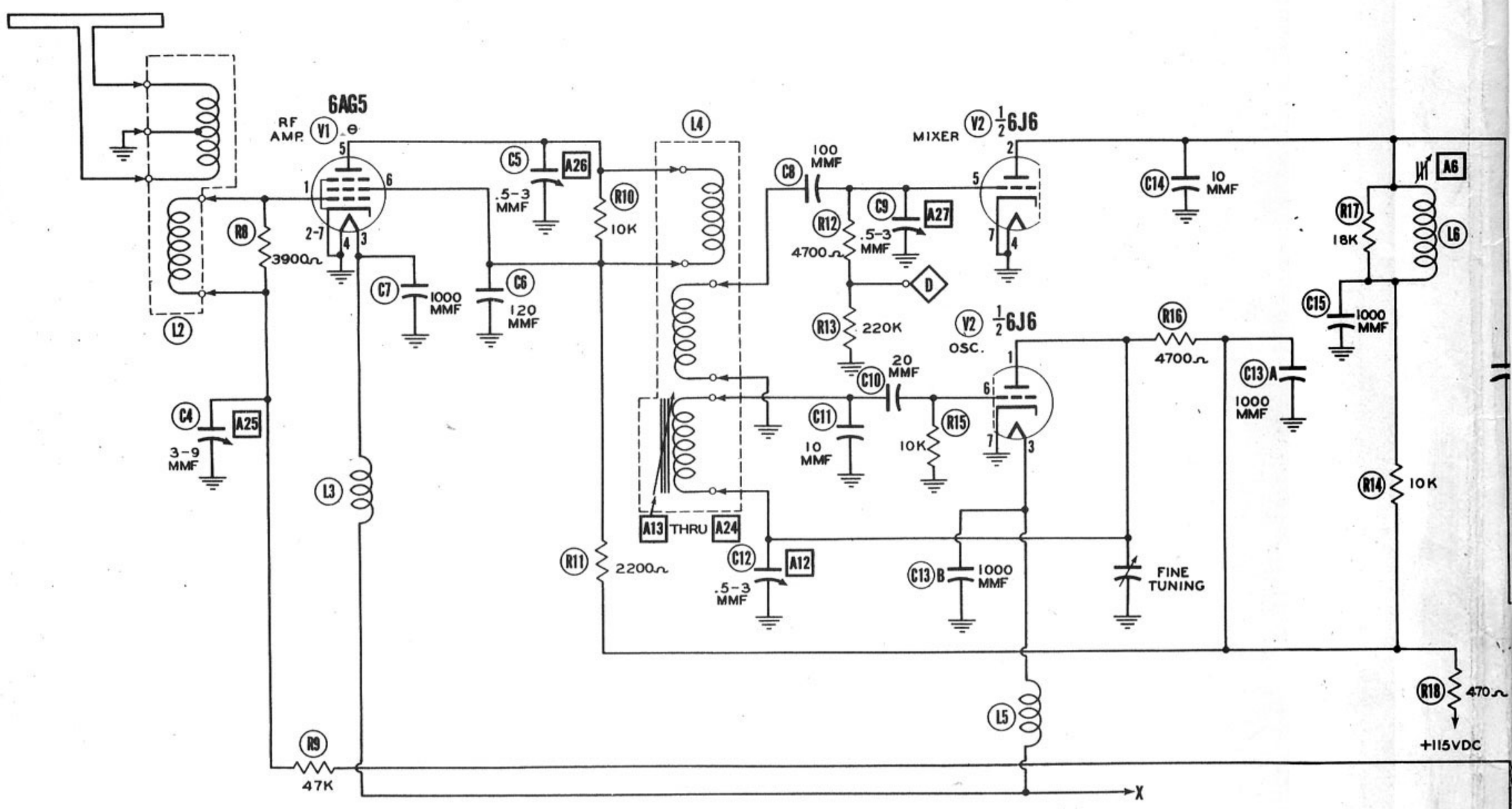

THE COOPERATION OF THE MANUFACTURER OF THIS RECEIVER MAKES IT POSSIBLE TO BRING YOU THIS SERVICE

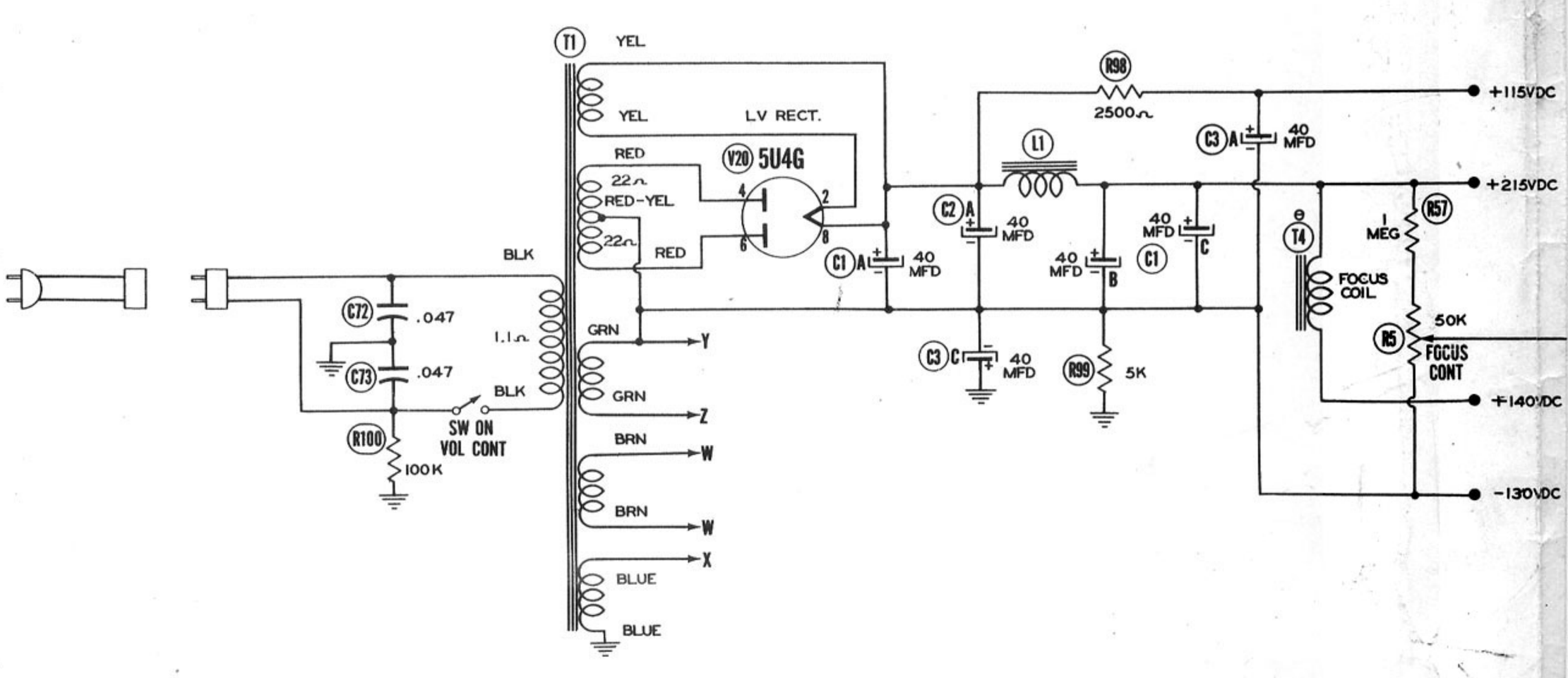

DOTTED IN PARTS ARE NOT USED IN ALL MODELS. WHEN DOTTED IN PARTS ARE USED POINTS MARKED X ARE BROKEN.

θ SEE PARTS LIST FOR ALTERNATE VALUE OR APPLICATION

A PHOTOFACT STANDARD NOTATION SCHEMATIC

© Howard W. Sams & Co., Inc. 1951

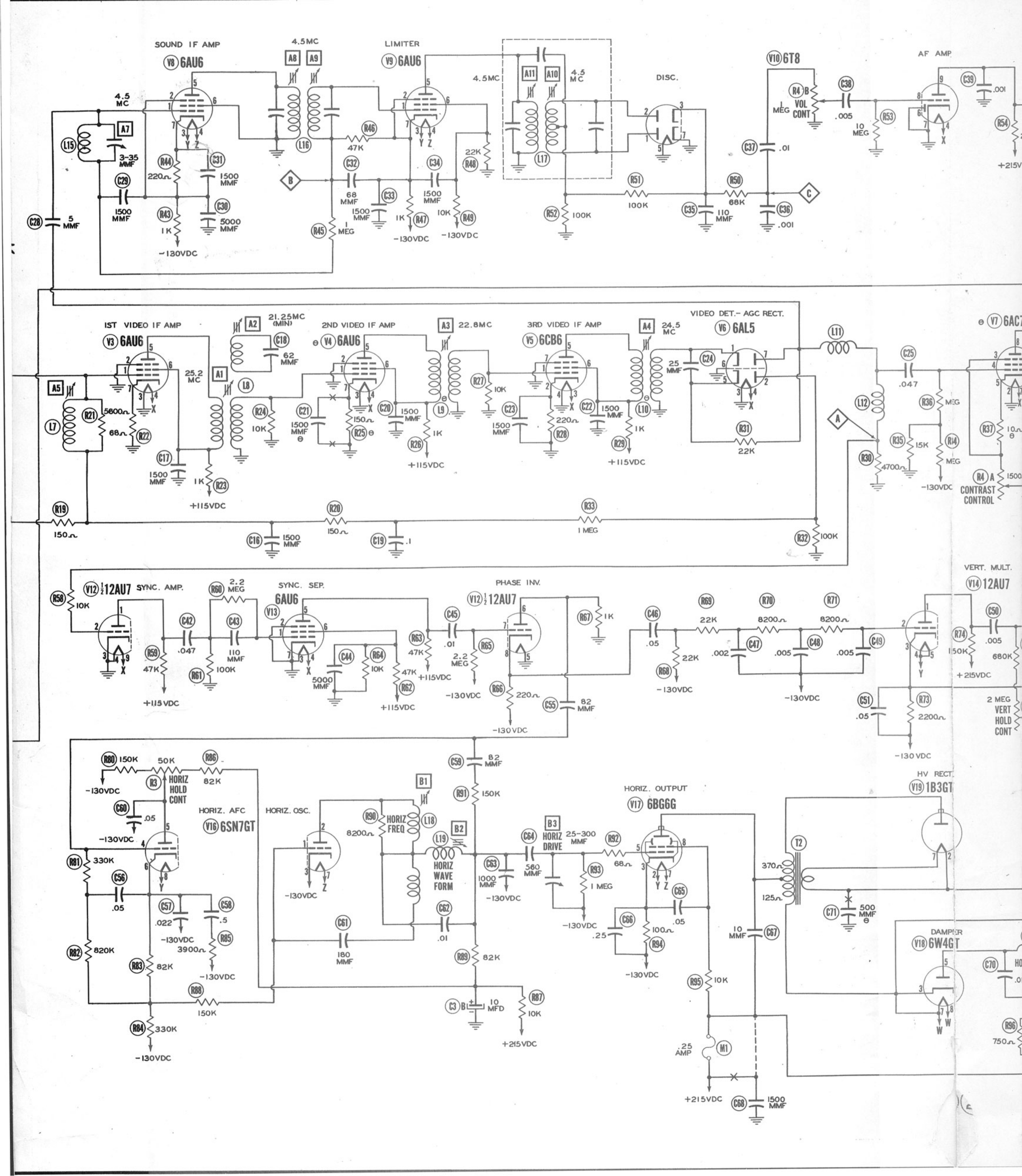
SOUND IF AMP
V8 6AU6
4.5MC
A8
A9
LIMITER
V9 6AU6
4.5MC
A11
A10
4.5 MC
DISC.
V10 6T8
AF AMP
R4 B
VOL CONT
1 MEG
C38
.005
10 MEG
R53
C39
.001
R54
+215V
L15
A7
3-35 MMF
C29
1500 MMF
C28
5 MMF
R44
220Ω
C31
1500 MMF
C30
5000 MMF
R43
1K
-130VDC
L16
R46
47K
C32
68 MMF
C33
1500 MMF
R45
1 MEG
B
C34
1500 MMF
R47
1K
-130VDC
R48
22K
R49
10K
-130VDC
L17
R52
100K
R51
100K
C35
110 MMF
R50
68K
C37
.01
C36
.001
C
IST VIDEO IF AMP
V3 6AU6
A2
21.25MC (MIN)
C18
62 MMF
25.2 MC
A1
L8
A5
L7
R21
5600Ω
68Ω
R22
C17
1500 MMF
1K
R23
+115VDC
R24
10K
2ND VIDEO IF AMP
V4 6AU6
A3
22.8MC
C21
1500 MMF
150Ω
R25
C20
1500 MMF
L9
R26
1K
+115VDC
3RD VIDEO IF AMP
V5 6CB6
A4
24.5 MC
R27
10K
C23
1500 MMF
220Ω
R28
C22
1500 MMF
L10
R29
1K
+115VDC
VIDEO DET.- AGC RECT.
V6 6AL5
C24
25 MMF
R31
22K
L11
L12
A
C25
.047
R36
MEG
R35
15K
R14
MEG
-130VDC
R30
4700Ω
V7 6AC7
R37
10Ω
R4 A
CONTRAST CONTROL
1500
R19
150Ω
R20
150Ω
C16
1500 MMF
C19
.1
R33
1 MEG
R32
100K
V12 ½12AU7
SYNC. AMP.
R58
10K
R59
47K
+115VDC
C42
.047
R60
2.2 MEG
C43
110 MMF
R61
100K
SYNC. SEP.
6AU6
V13
C44
5000 MMF
R64
10K
R62
47K
+115VDC
R63
47K
+115VDC
C45
.01
R65
2.2 MEG
-130VDC
PHASE INV.
V12 ½12AU7
R66
220Ω
-130VDC
C55
82 MMF
R67
1K
C46
.05
R68
22K
-130VDC
R69
22K
R70
8200Ω
R71
8200Ω
C47
.002
C48
.005
C49
.005
-130VDC
VERT. MULT.
V14 12AU7
C50
.005
R74
150K
680K
+215VDC
C51
.05
R73
2200Ω
-130VDC
2 MEG VERT HOLD CONT
R80
150K
50K
R86
82K
-130VDC
R3
HORIZ HOLD CONT
C60
.05
-130VDC
HORIZ. AFC
V16 6SN7GT
R81
330K
C56
.05
C57
.022
-130VDC
C58
.5
R85
3900Ω
-130VDC
R82
820K
R83
82K
R88
150K
R84
330K
-130VDC
HORIZ. OSC.
-130VDC
R90
8200Ω
HORIZ FREQ
B1
L18
L19
B2
HORIZ WAVE FORM
C61
180 MMF
C62
.01
C59
82 MMF
R91
150K
C63
1000 MMF
-130VDC
R89
82K
C3
10 MFD
R87
10K
+215VDC
C64
560 MMF
B3
HORIZ DRIVE
25-300 MMF
R92
68Ω
R93
1 MEG
-130VDC
HORIZ. OUTPUT
V17 6BG6G
C66
.25
R94
100Ω
-130VDC
C65
.05
R95
10K
.25 AMP
M1
+215VDC
C68
1500 MMF
C67
10 MMF
T2
370Ω
125Ω
C71
500 MMF
HV RECT.
V19 1B3GT
DAMPER
V18 6W4GT
C70
.01
R96
750Ω

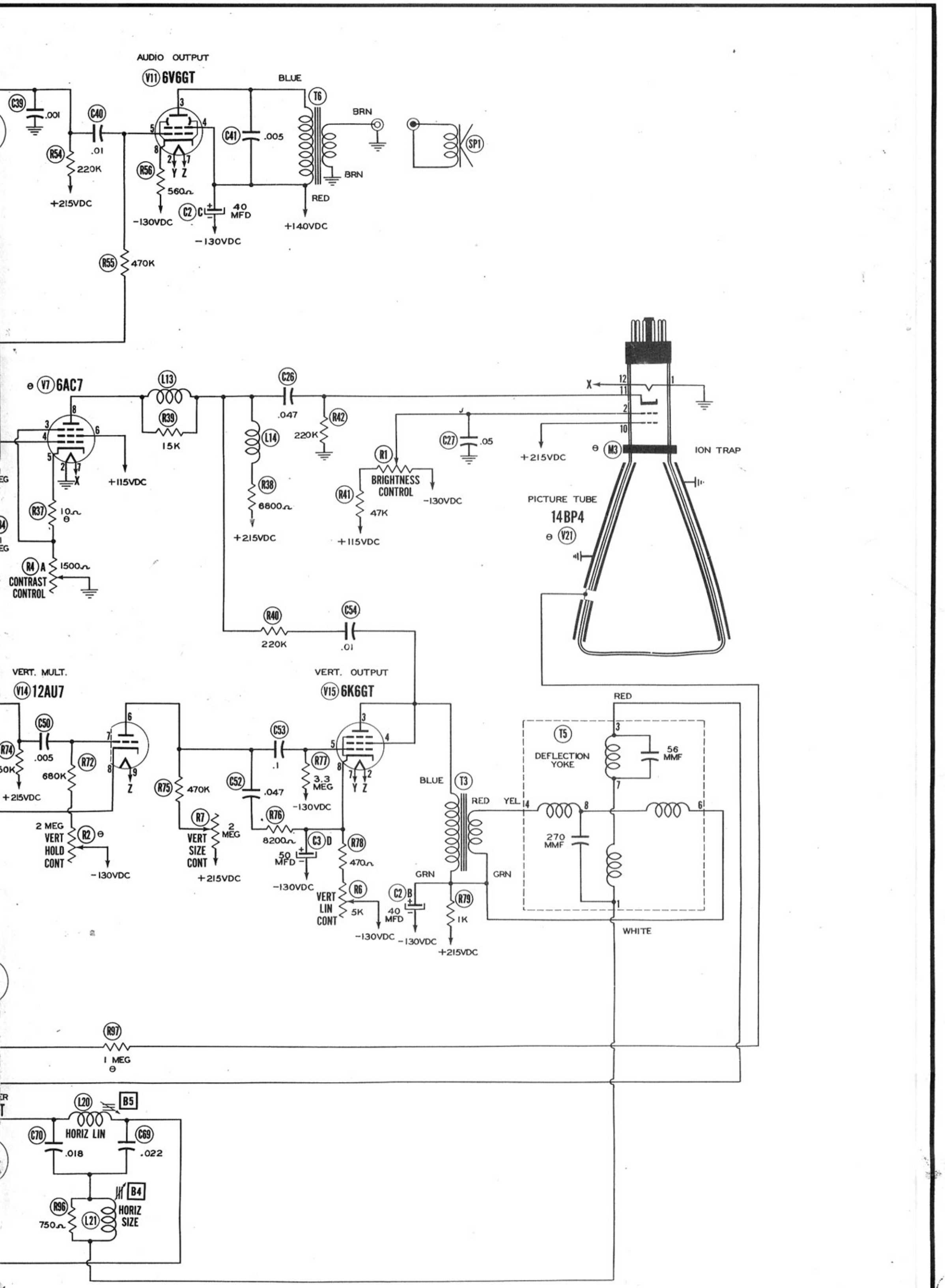

EMERSON MODELS 662-B
(Ch. 120127-B), 663-B (Ch. 120128-B)

EMERSON MODELS 662-B
(Ch. 120127-B), 663-B (Ch. 120128-B)

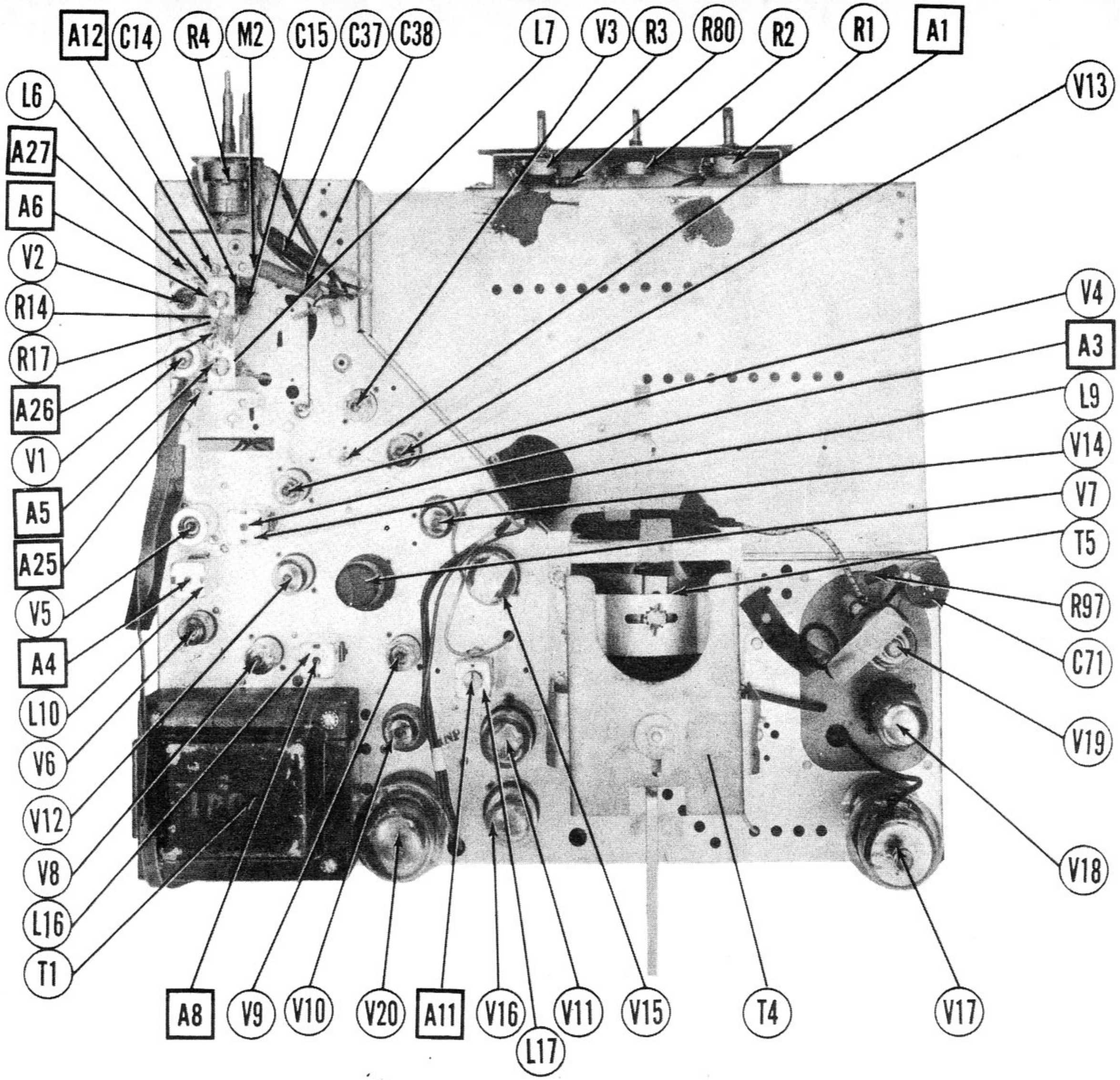

CHASSIS TOP VIEW

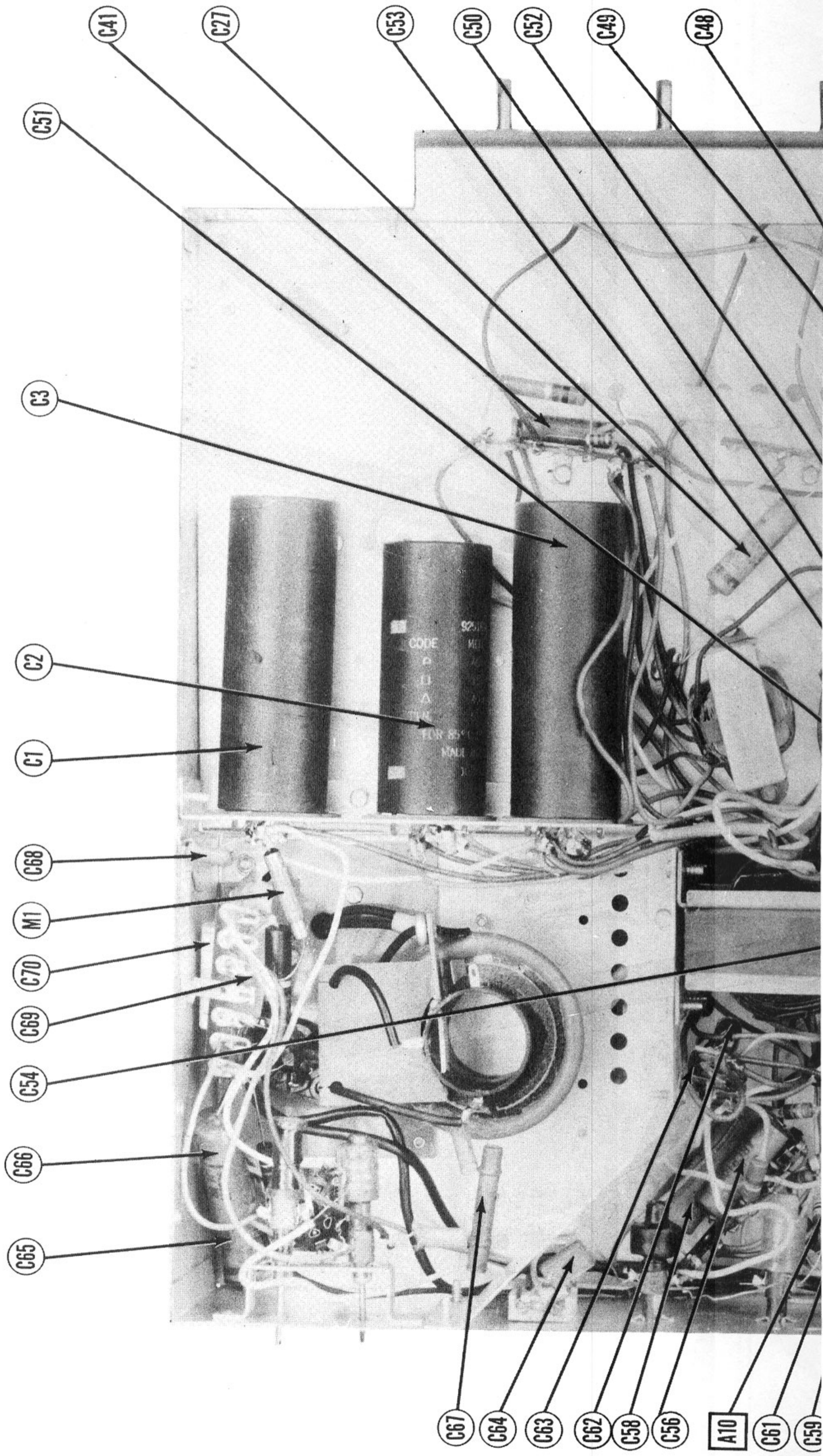
C41
C27
C53
C50
C52
C49
C48
C51
C3
C2
C1
C68
M1
C70
C69
C54
C66
C65
C67
C64
C63
C62
C58
C56
A10
C61
C59

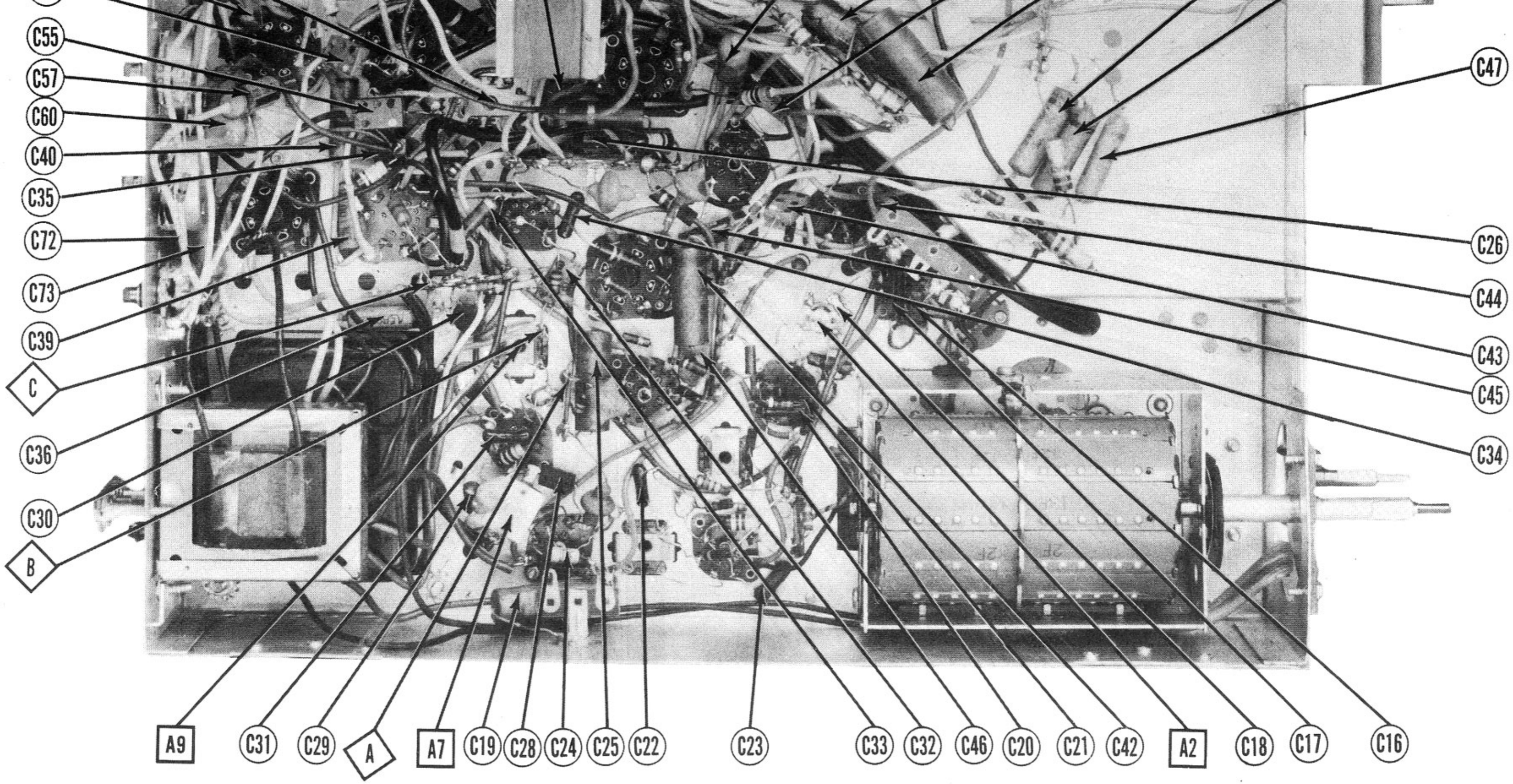

CHASSIS BOTTOM VIEW-CAPACITOR AND ALIGNMENT IDENTIFICATION

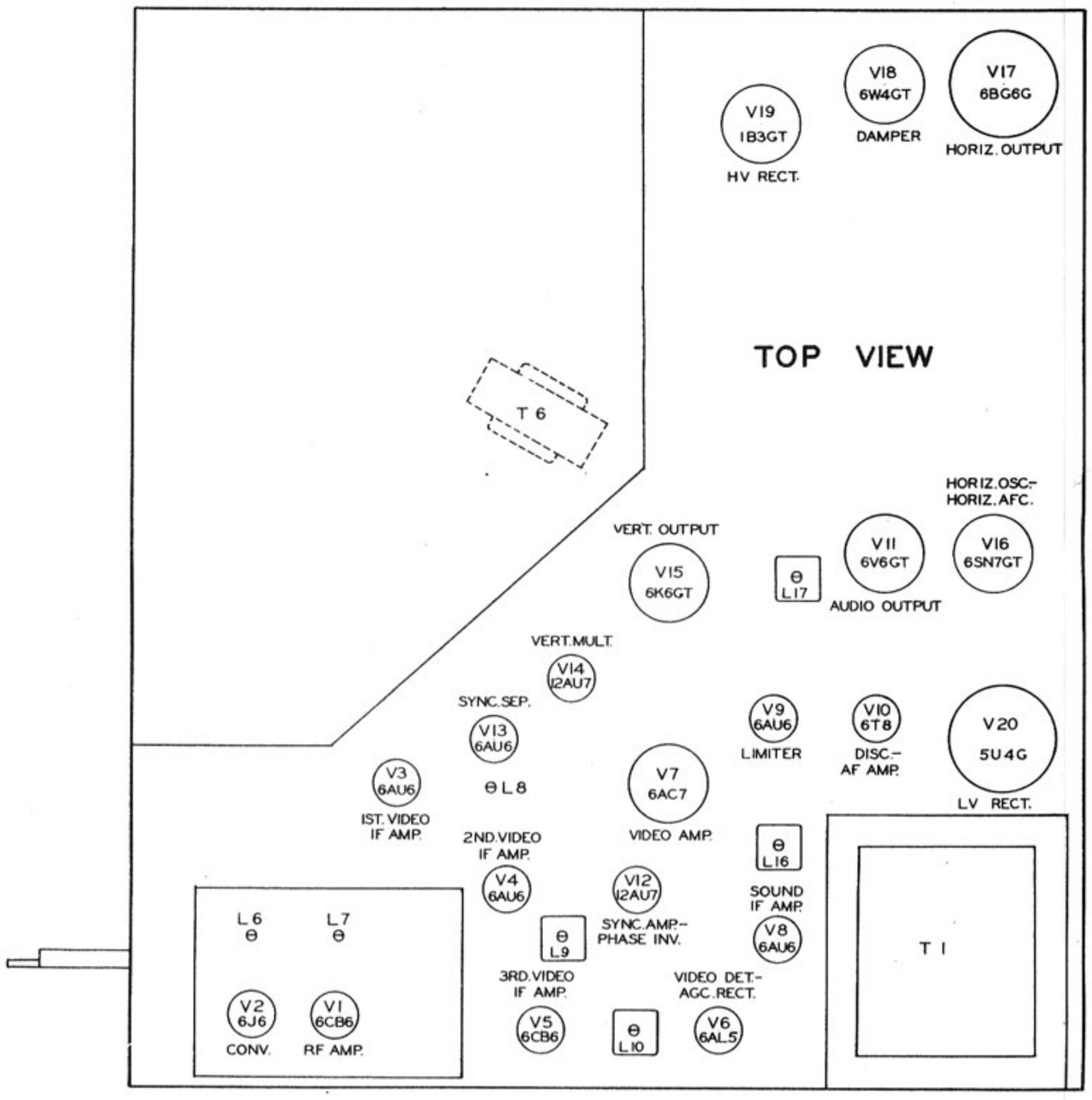

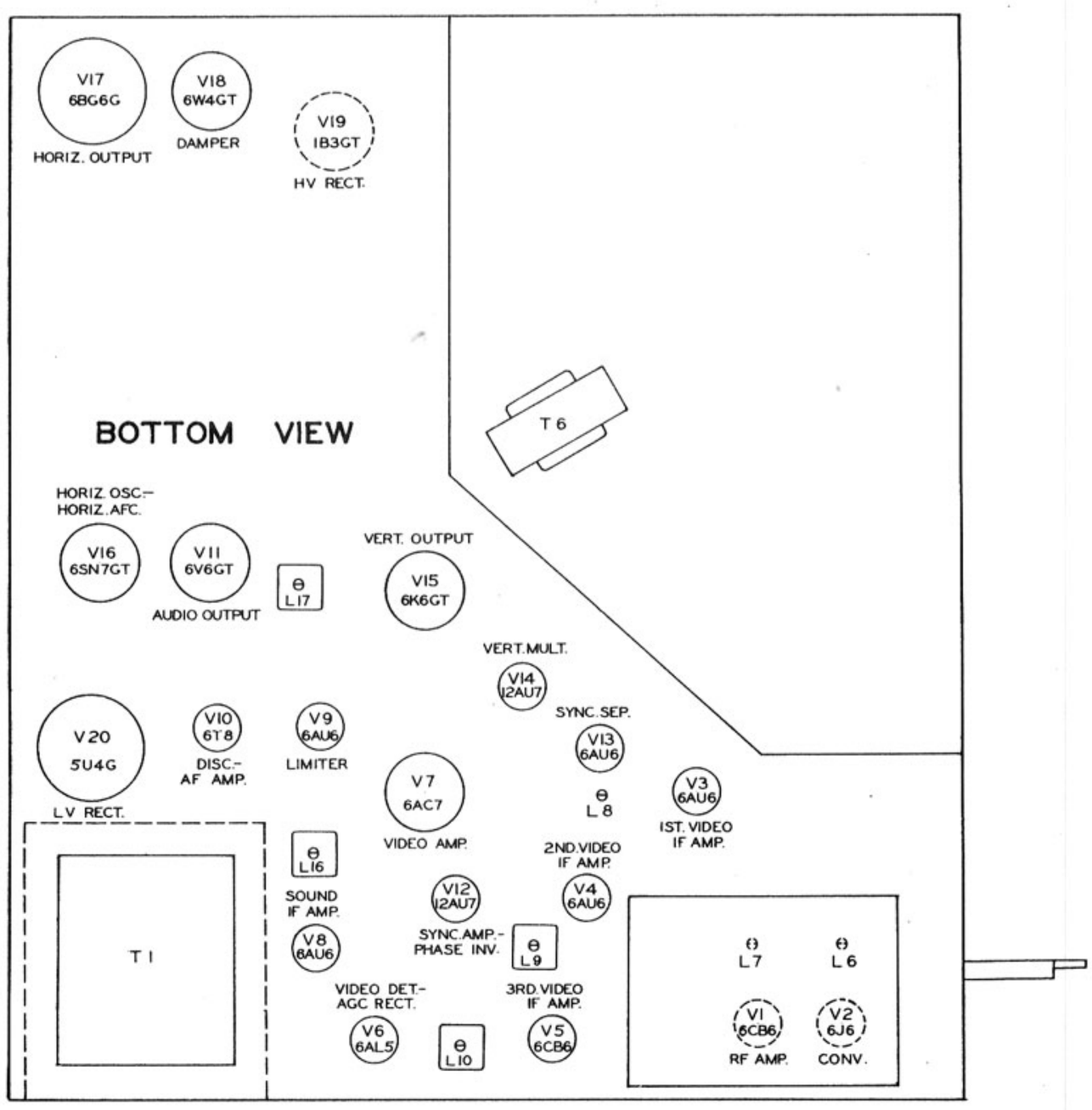

TUBE PLACEMENT CHART

ALIGNMENT INSTRUCTIONS

ALIGNMENT INSTRUCTIONS—READ CAREFULLY BEFORE ATTEMPTING ALIGNMENT

The high voltage shock hazard may be eliminated by removing the horizontal oscillator tube (V16) from its socket.

VIDEO IF ALIGNMENT

To disable the local oscillator and prevent erroneous indications, remove the converter tube (V2) and replace it with a 6J6 which has pin 1 removed.
Connect the negative lead of a 3 volt battery to the junction of R33 and C19, connect the positive lead to chassis.
Connect the synchronized sweep voltage from the signal generator to the horizontal input of the oscilloscope for horizontal deflection.

	DUMMY ANTENNA	SWEEP GENERATOR COUPLING	SWEEP GENERATOR FREQUENCY	MARKER GENERATOR FREQUENCY	CHANNEL	CONNECT SCOPE	ADJUST	REMARKS
1.	.001MFD	High side to pin 1 (grid) of 6AU6 (V3). Low side to chassis.	Not used	25.2MC (Unmod.)	Any	USE VTVM DC probe to point A Common to chassis.	A1	Adjust for maximum deflection.
2.	"	"	"	21.25MC	"	"	A2	Adjust for MINIMUM deflection.
3.	"	"	"	22.8MC	"	"	A3	Adjust for maximum deflection.
4.	"	"	"	24.5MC	"	"	A4	"
5.	"	"	24MC (10MC SWP)	21.25MC 22.25MC 25.75MC	"	Vert. amp. to point A. Low side to chassis.		Check for response curve similar to figure 1. If necessary retouch A1 to position 25.75MC marker properly, and A3 to flatten top of response curve.
6.	Direct	High side to an ungrounded tube shield floating over dummy converter tube (V2). Low side to chassis.	"	22.25MC 25.75MC	"	Vert. amp thru detector probe (fig. 2) to pin 5 (plate) of 6AU6 (V3). Low side to chassis.	A5, A6	Adjust for response curve similar to fig. 3.

SOUND IF ALIGNMENT

Use frequency modulated signal with 60 ∿ modulation and 450KC sweep. Use 120 ∿ sawtooth voltage in scope for horizontal deflection.

	DUMMY ANTENNA	SWEEP GENERATOR COUPLING	SWEEP GENERATOR FREQUENCY	MARKER GENERATOR FREQUENCY	CHANNEL	CONNECT SCOPE	ADJUST	REMARKS
7.	.001MFD	High side to pin 7 (plate) of 6AL5 (V6). Low side to chassis.	4.5MC (450KC SWP)	4.5MC	Any	Vert. amp. thru 10KΩ to point B. Low side to chassis.	A7, A8 A9	Adjust for maximum amplitude and symmetry as per figure 4.
8.	"	"	"	"	"	Vert. amp. to point C Low side to chassis.	A10, A11	Adjust A10 so 4.5MC occurs at center of cross-over lines as per figure 5. Adjust A-11 for maximum amplitude and straightness of cross-over lines.

OSCILLATOR ALIGNMENT

Remove the dummy converter tube and replace the original 6J6 in its socket.
Complete oscillator alignment may not be necessary.
If the oscillator seems to be off frequency a similar amount for a majority of the channels, it may be possible to correct them in one step using A12. It should be noted that this is an all channel oscillator circuit adjustment and should not be adjusted for any individual channel. If adjustment of A12 will not bring all channels within the range of the fine tuning control, it will be necessary to adjust the channel strip adjustment for each channel that is off frequency. The channel strip adjustment screws are reached through a hole just to the right of the channel switch shaft. The correct adjustment screw is accessible through this hole as the channel switch is turned to each channel.
Connect the synchronized sweep voltage from the signal generator to the horizontal input of the oscilloscope for horizontal deflection.
The sweep generator output lead should be terminated with its characteristic impedance, usually 50 ohms.

	DUMMY ANTENNA	SWEEP GENERATOR COUPLING	SWEEP GENERATOR FREQUENCY	MARKER GENERATOR FREQUENCY	CHANNEL	CONNECT SCOPE	ADJUST	REMARKS
9.	Two 120Ω carbon resistors	Across antenna terminals with 120Ω in each lead.	213MC (10MC SWP)	211.25MC 215.75MC	13	Vert. amp to point A Low side to chassis.	A13	Adjust to place sound marker in "notch" as shown in figure 6. The video marker should be at 40%.
			207MC (10MC SWP)	205.25MC 209.75MC	12		A14	
			201MC (10MC SWP)	199.25MC 203.75MC	11		A15	
			195MC (10MC SWP)	193.25MC 197.75MC	10		A16	
			189MC (10MC SWP)	187.25MC 187.25MC	9		A17	
			183MC (10MC SWP)	181.25MC 185.75MC	8		A18	
			177MC (10MC SWP)	175.25MC 179.75MC	7		A19	
			85MC (10MC SWP)	83.25MC 87.75MC	6		A20	
			79MC (10MC SWP)	77.25MC 81.75MC	5		A21	
			69MC (10MC SWP)	67.25MC 71.75MC	4		A22	
			63MC (10MC SWP)	61.25MC 65.75MC	3		A23	
			57MC (10MC SWP)	55.25MC 54.75MC	2		A24	

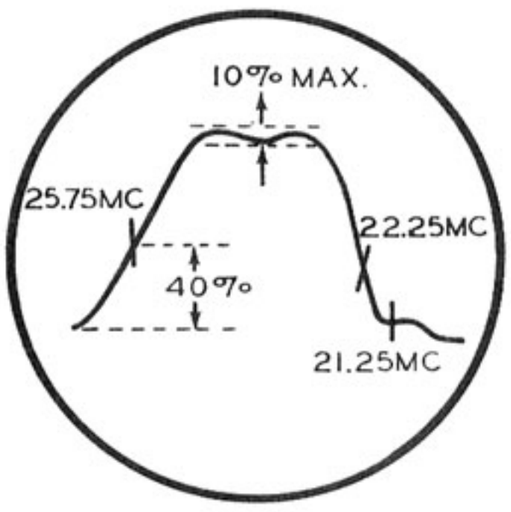

FIG.1

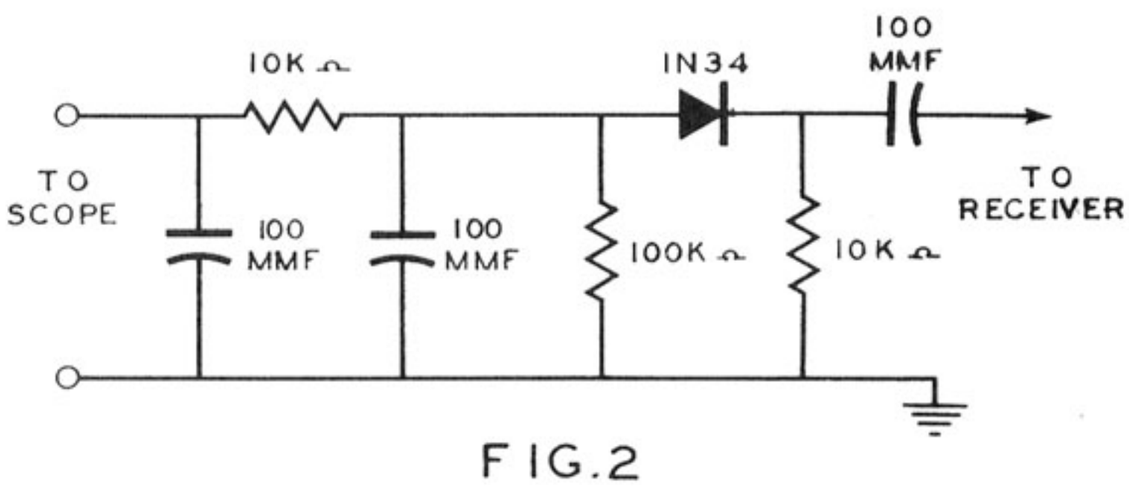

FIG.2

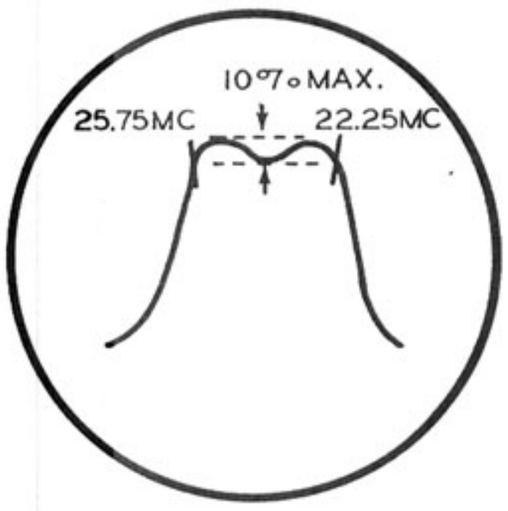

FIG.3

ALIGNMENT INSTRUCTIONS (CONT.)

RF AND MIXER ALIGNMENT

Connect the synchronized sweep voltage from the signal generator to the horizontal input of the oscilloscope for horizontal deflection. The sweep generator output lead should be terminated with its characterisitic impedance, usually 50 ohms.

	DUMMY ANTENNA	SWEEP GENERATOR COUPLING	SWEEP GENERATOR FREQUENCY	MARKER GENERATOR FREQUENCY	CHANNEL	CONNECT SCOPE	ADJUST	REMARKS
10.	Two 120Ω carbon resistors	Across antenna terminals with 120Ω in each lead.	207MC (10MC SWP)	205.25MC 209.75MC	12	Vert. amp. thru 10KΩ to point (D). Low side to chassis.	A25, A26, A27	Adjust for response curve similar to figure 7 with markers above 90%.
11.	"	"	213MC (10MC SWP)	211.25MC 215.75MC	13	"		Check for response similar to figure 7. If markers fall below 70% on any channel make slight adjustment of A25, A26 and A27 with channel switch set for that channel. Recheck all channels to see that they have not been seriously effected.
			201MC (10MC SWP)	199.25MC 203.75MC	11			
			195MC (10MC SWP)	193.25MC 197.75MC	10			
			189MC (10MC SWP)	187.25MC 191.75MC	9			
			183MC (10MC SWP)	181.25MC 185.75MC	8			
			177MC (10MC SWP)	175.25MC 179.75MC	7			
			85MC (10MC SWP)	83.25MC 87.75MC	6			
			79MC (10MC SWP)	77.25MC 81.75MC	5			
			69MC (10MC SWP)	67.25MC 71.75MC	4			
			63MC (10MC SWP)	61.25MC 65.75MC	3			
			57MC (10MC SWP)	55.25MC 59.75MC	2			

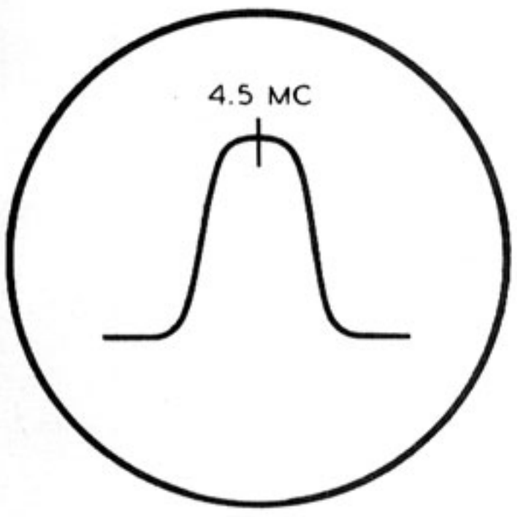

FIG. 4

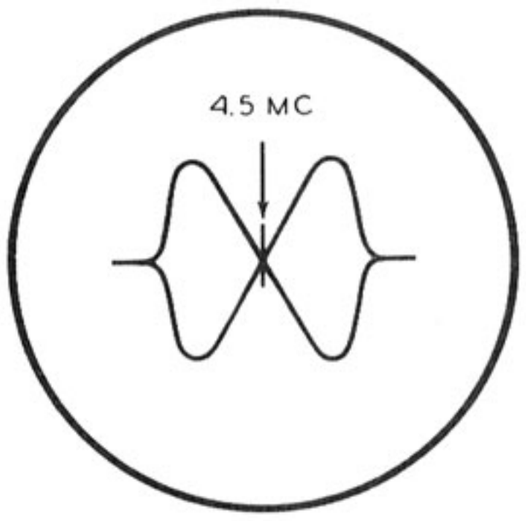

FIG. 5

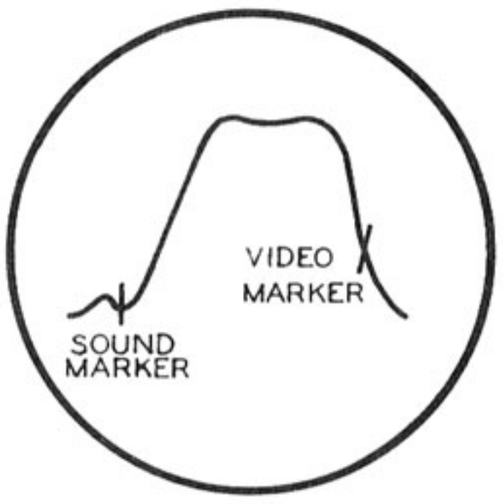

FIG. 6

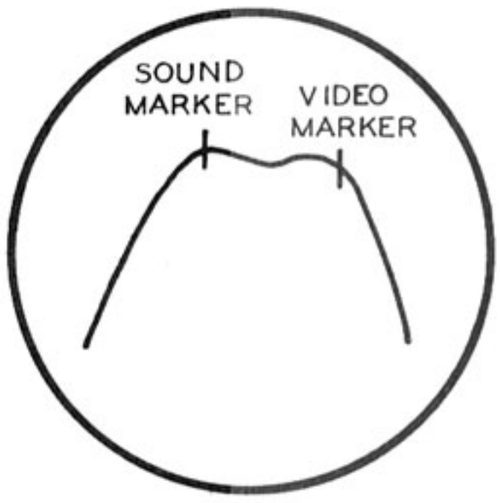

FIG. 7

VOLTAGE AND RESISTANCE MEASUREMENTS

VOLTAGE READINGS

Item	Tube	Pin 1	Pin 2	Pin 3	Pin 4	Pin 5	Pin 6	Pin 7	Pin 8	Pin 9
V 1	6CB6	-1.6VDC	0V	6.3VAC	0V	80VDC	80VDC	0V		
V 2	6J6	65VDC	70VDC	6.3VAC	0V	-1.7VDC	§-3.8VDC	0V		
V 3	6AU6	-.3VDC	0V	0V	6.3VAC	105VDC	105VDC	.4VDC		
V 4	6AU6	0V	0V	0V	6.3VAC	105VDC	105VDC	1.1VDC		
V 5	6CB6	0V	1.4VDC	6.3VAC	0V	105VDC	105VDC	0V		
V 6	6AL5	0V	-2VDC	0V	6.3VAC	-.1VDC	0V	-1.6VDC		
V 7	6AC7	0V	0V	1.3VDC	-.4VDC	1.3VDC	115VDC	6.3VAC	210VDC	
V 8	6AU6	#.2VDC	#4.3VDC	#0V	#6.3VAC	#135VDC	#135VDC	#4.2VDC		
V 9	6AU6	#1VDC	#2.2VDC	#0V	#6.3VAC	#135VDC	#45VDC	#2.2VDC		
V 10	6T8	-.8VDC	-.8VDC	-.1VDC	6.3VAC	0V	0V	0V	-.4VDC	75VDC
V 11	6V6GT	0V	#0V	#275VDC	#280VDC	#0V	0V	#6.3VAC	#18VDC	
V 12	12AU7	27VDC	-.5VDC	0V	0V	0V	#125VDC	#-.2VDC	#2.5VDC	6.3VAC
V 13	6AU6	-1.3VDC	0V	0V	6.3VAC	110VDC	22VDC	0V		
V 14	12AU7	#100VDC	#0V	#5.5VDC	#0V	#0V	#155VDC #80VDC	#-25VDC #-35VDC	#5.5VDC	#6.3VAC
V 15	6K6GT	0V	#6.3VAC	#330VDC	#330VDC	#-15VDC #0V	#45VDC #0V	#0V	#50VDC #12VDC	
V 16	6SN7GT	#-75VDC	#175VDC	#0V	#-2.4VDC	#250VDC #150VDC	#-8VDC	#6.3VAC	#0V	
V 17	6BG6G	0V	#0V	#9.6VDC	#-10VDC	#-10VDC	#9.6VDC	#6.3VAC	#265VDC	TOP CAP *
V 18	6W4GT	0V	0V	500VDC	0V	225VDC	0V	500VDC	500VDC	
V 19	1B3GT	* DO NOT MEASURE								
V 20	5U4G	0V	230VDC	0V	205VAC	0V	205VAC	0V	230VDC	
V 21	14BP4	0V	65VDC -140VDC	PIN 10 215VDC	PIN 11 0V	PIN 12 6.3VAC				

FOCUS CONTROL COUNTERCLOCKWISE
§ TAKEN WITH VACUUM TUBE VOLTMETER
# MEASURED FROM -130VDC POINT
* DO NOT MEASURE

RESISTANCE READINGS

Item	Tube	Pin 1	Pin 2	Pin 3	Pin 4	Pin 5	Pin 6	Pin 7	Pin 8	Pin 9
V 1	6CB6	1.1 Meg.	0Ω	.1Ω	0Ω	†5.3KΩ	†5.3KΩ	0Ω		
V 2	6J6	†7.7KΩ	†13KΩ	.1Ω	0Ω	225KΩ	10KΩ	0Ω		
V 3	6AU6	1.1 Meg.	0Ω	0Ω	.1Ω	†3.5KΩ	†3.5KΩ	68Ω		
V 4	6AU6	.4Ω	0Ω	0Ω	.1Ω	†3.5KΩ	†3.5KΩ	150Ω		
V 5	6CB6	1.4Ω	220Ω	.1Ω	0Ω	†3.5KΩ	†3.5KΩ	0Ω		
V 6	6AL5	1.4Ω	100KΩ	0Ω	.1Ω	27KΩ	0Ω	4.7KΩ		
V 7	6AC7	0Ω	0Ω	1.5KΩ	1 Meg.	1.5KΩ	†2.5KΩ	.1Ω	†6.9KΩ	
V 8	6AU6	#1 Meg.	#1KΩ	#0Ω	#.1Ω	2.2Ω	0Ω	#1.2KΩ		
V 9	6AU6	#48KΩ	#1KΩ	#0Ω	#.1Ω	2.2Ω	9KΩ	#1KΩ		
V 10	6T8	100KΩ	100KΩ	200KΩ	.1Ω	0Ω	0Ω	0Ω	10 Meg.	†220KΩ
V 11	6V6GT	Inf.	#0Ω	†2.7KΩ	†2.4KΩ	#470KΩ	Inf.	#.1Ω	#560Ω	
V 12	12AU7	†50KΩ	15KΩ	0Ω	0Ω	0Ω	1KΩ	#2.2 Meg.	#220Ω	.1Ω
V 13	6AU6	2.3 Meg.	0Ω	0Ω	.1Ω	†50KΩ	†28KΩ	0Ω		
V 14	12AU7	†150KΩ	#60KΩ	#2.2KΩ	#0Ω	#0Ω	†470KΩ †2.5 Meg.	#680KΩ #2.7Meg.	#2.2KΩ	#.1Ω
V 15	6K6GT	Inf.	#.1Ω	†1.5KΩ	†1.5KΩ	#3.3 Meg.	#5KΩ #0Ω	#0Ω	#5.5KΩ #470Ω	
V 16	6SN7GT	#480KΩ	†90KΩ	#0Ω	#1.5 Meg.	†70KΩ †80KΩ	#410KΩ	#.1Ω	#0Ω	
V 17	6BG6G	Inf.	#0Ω	#100Ω	#1 Meg.	#1 Meg.	#100Ω	#.1Ω	†10KΩ	TOP CAP ▲125Ω
V 18	6W4GT	Inf.	Inf.	Inf.	Inf.	†140Ω	Inf.	▲0Ω	▲.2Ω	
V 19	1B3GT	Inf.	Inf.	Inf.	Inf.	Inf.	Inf.	Inf.	Inf.	TOP CAP ▲495Ω
V 20	5U4G	Inf.	30KΩ	Inf.	4.5KΩ	Inf.	4.5KΩ	Inf.	30KΩ	
V 21	14BP4	0Ω	#45KΩ #0Ω	PIN 10 †100Ω	PIN 11 220KΩ	PIN 12 .1Ω				

FOCUS CONTROL COUNTERCLOCKWISE
MEASURED FROM -130 VDC POINT
† MEASURED FROM PIN 8 OF V20
▲ MEASURED FROM PIN 3 OF V18

1. DC Voltage measurements are at 20,000 ohms per volt; AC Voltage measured at 1,000 ohms.
2. Pin numbers are counted in a clockwise direction on bottom of socket.
3. Measured values are from socket pin to common negative unless otherwise stated.
4. Line voltage maintained at 117 volts for voltage readings.
5. Front panels controls set at minimum.
6. Where readings may vary according to the setting of the service controls, both minimum and maximum readings are given.

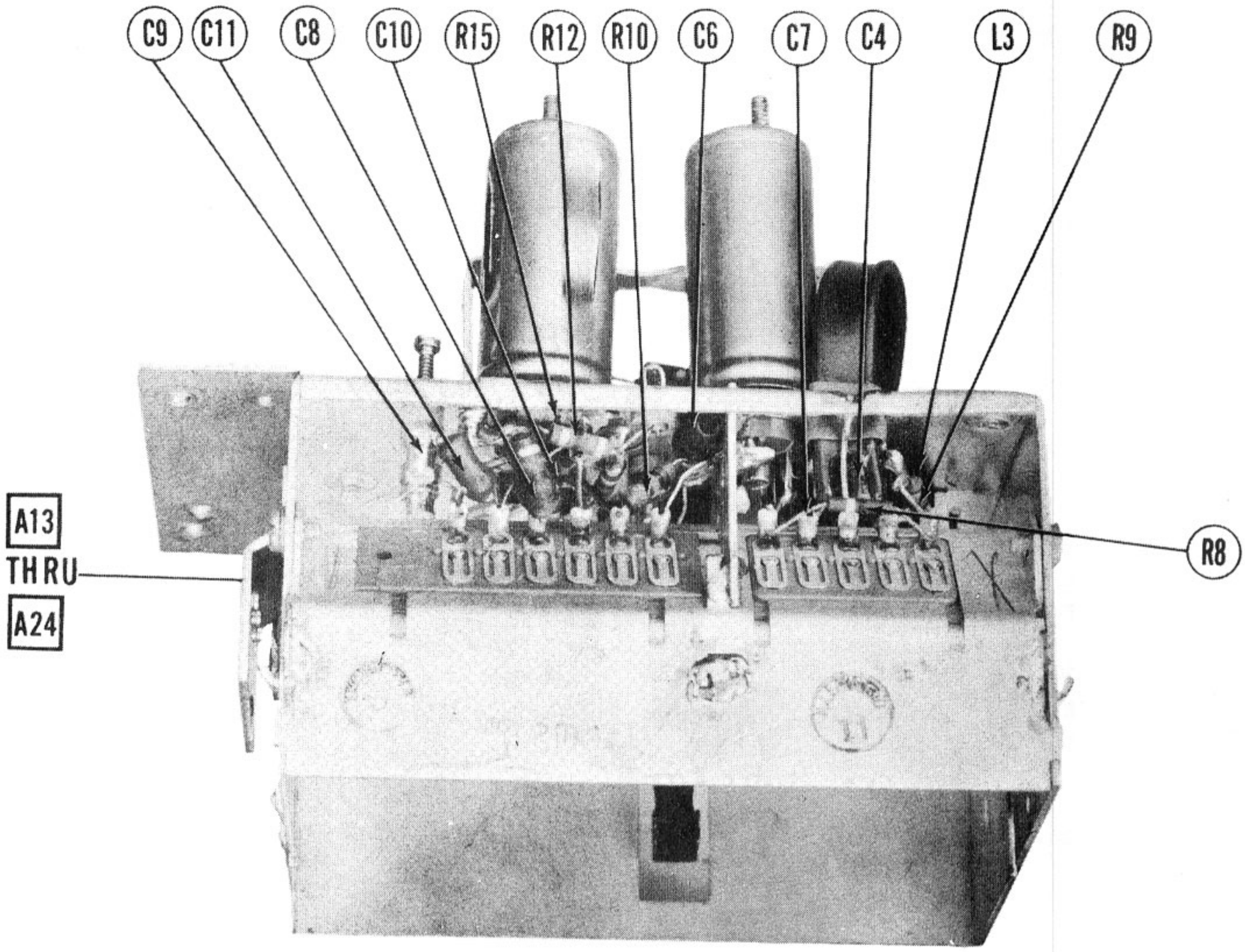

RF TUNER-RIGHT SIDE

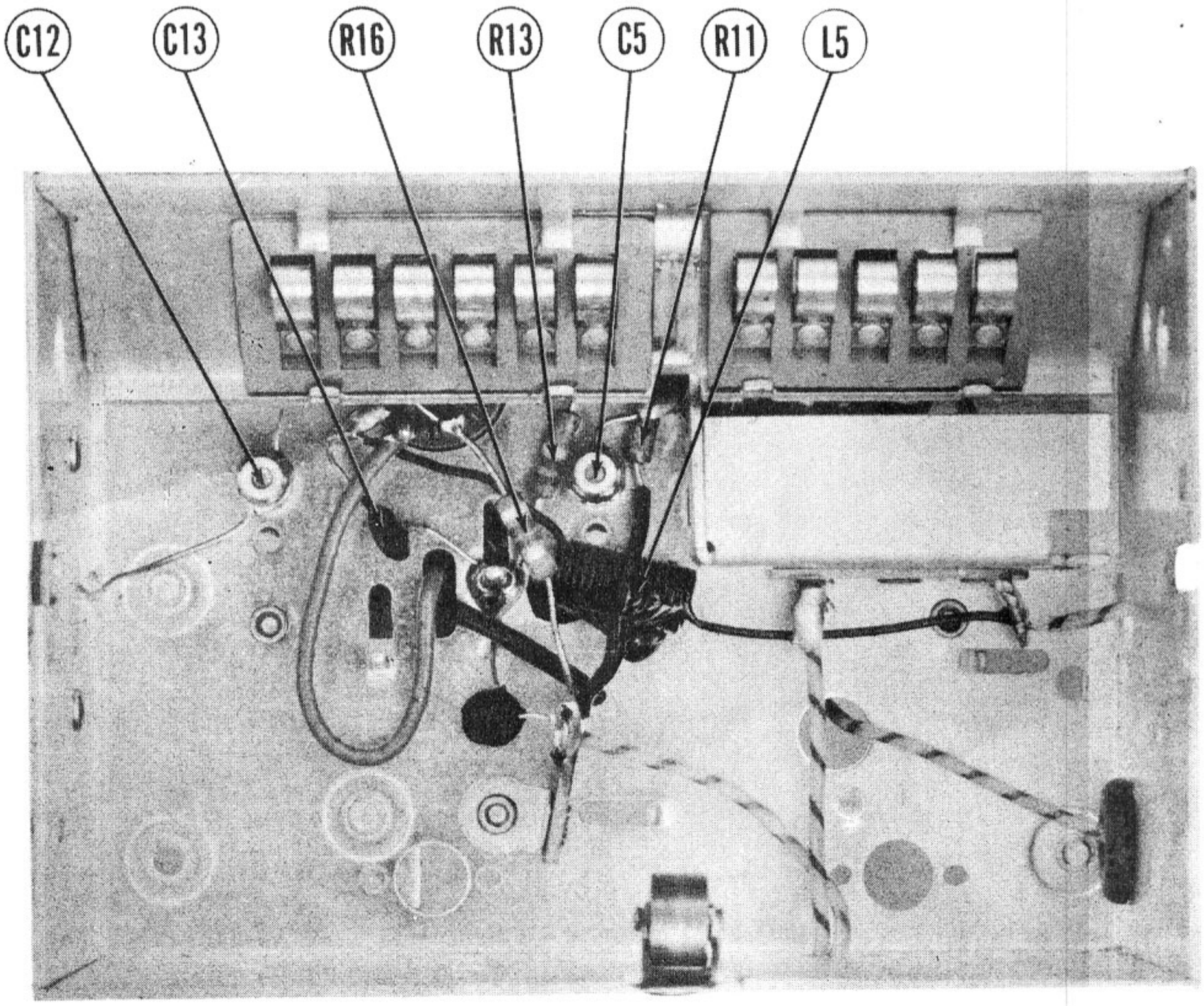

RF TUNER-BOTTOM VIEW

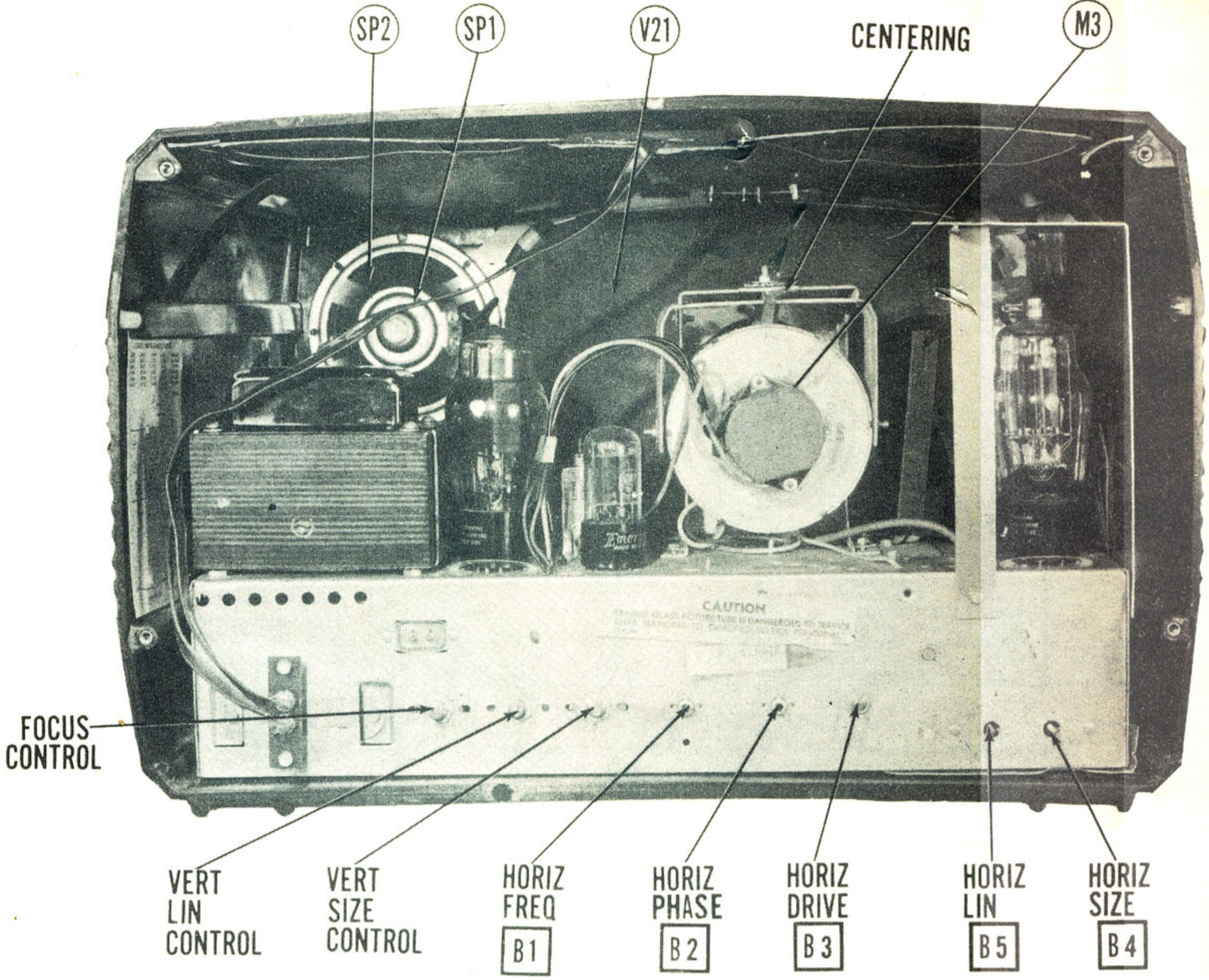

CABINET-REAR VIEW

HORIZONTAL SWEEP CIRCUIT ADJUSTMENTS

Turn the set on and tune in a TV station, preferably a test pattern.

Connect a short across C62.

Turn the horizontal hold control to maximum clockwise.

Adjust the horizontal frequency slug (B1) until the picture synchronizes horizontally.

Remove the short from C62 and connect the vertical input of oscilloscope through a 22KΩ resistor to the junction of C62 and R90, low side to chassis.

Adjust the horizontal phase slug (B2) until the broad and narrow peaks of the waveform on the scope are of equal height as shown in figure 8. If necessary adjust B1 to keep the picture in sync while adjusting B2.

Remove the oscilloscope. If the picture shows instability with the hold control at maximum clockwise, adjust B1 until the picture will hold sync when switched to another channel and back again.

Adjust the horizontal drive trimmer (B3) for maximum brightness without crowding in the picture.

Adjust the horizontal size slug (B4) until the picture fills the mask horizontally.

Adjust the horizontal linearity slug (B5) until the picture is symmetrical from left to right. Slight readjustment of B3 may be necessary for optimum results.

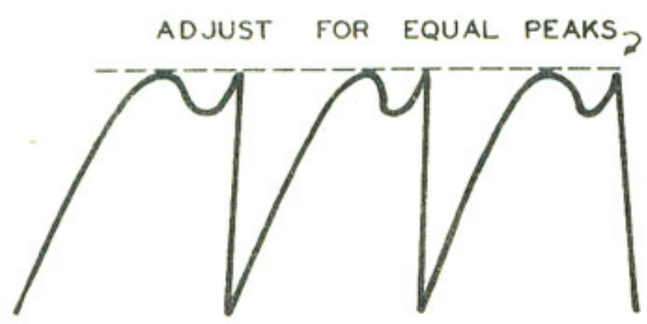

FIG. 8

TUBES (SYLVANIA or Equivalent)

ITEM No.	USE	REPLACEMENT DATA EMERSON PART No.	STANDARD REPLACEMENT	RMA BASE TYPE	NOTES
V1A	RF Amp.	800055	6CB6	6CK	
B	RF Amp.	800535	6AG5	7BD	
C	RF Amp.	800052	6BC5	7BD	
V2	Converter	800536	6J6	7BF	
V3	1st Video IF	800533	6AU6	7BK	
V4A	2nd Video IF	800533	6AU6	7BK	
B	2nd Video IF	800535	6AG5	7BD	
V5	3rd Video IF	800055	6CB6	6CK	
V6	Video Det. -AGC Rect.	800541	6AL5	6BT	
V7A	Video Amp.	800390	6AC7	8N	
B	Video Amp.	800055	6CB6	6CK	
V8	Sound IF	800533	6AU6	7BK	
V9	Limiter	800533	6AU6	7BK	
V10	Discr. -AF Amp.	800035	6T8	9E	
V11	Audio Output	800270	6V6GT	7AC	
V12	Sync. Amp. -Phase Inv.	800026	12AU7	9A	
V13	Sync. Sep.	800533	6AU6	7BK	
V14	Vert. Mult.	800026	12AU7	9A	
V15	Vert. Output	800016	6K6GT	7S	
V16	Hor. AFC-Hor. Osc.	800380	6SN7GT	8BD	
V17	Hor. Output	800004	6BG6G	5BT	
V18	Damper	800037	6W4GT	4CG	
V19	HV Rect.	800450	1B3GT	3C	
V20	LV Rect.	800290	5U4G	5T	
V21A	Picture Tube	810014	14BP4	12D	
B	Picture Tube	810016	16RP4	12D	

CAPACITORS

Capacity values given in the rating column are in mfd. for Electrolytic and Paper Capacitors, and in mmfd. for Mica and Ceramic Capacitors.

ITEM No.	RATING CAP.	RATING VOLT	REPLACEMENT DATA EMERSON PART No.	AEROVOX PART No.	CENTRALAB PART No.	CORNELL-DUBILIER PART No.	ERIE PART No.	SPRAGUE PART No.	IDENTIFICATION CODES AND INSTALLATION NOTES
C1A	40	450	925196	AFH888J		UPT44445		TVL-3787	◓ Filter
B	40	450							■ Filter
C	40	450							▲ Filter
C2A	40	450	925196	AFH888J		UPT44445		TVL-3787	◓ Filter
B	40	450							■ Vert. Output Dec.
C	40	450							▲ Output Decoupling
C3A	40	450	925189	AF842J20B		UPT403		TVL-4747	◓ Filter
B	10	450							■ Decoupling
C	40	350							▲ Filter
D	50	50							Vert. Output Cath.
C4	3-9								Variable Trimmer
C5	.5-3				829-3				Variable Trimmer
C6	120			SI120	D6-121		GP2K-120	19C29	RF Amp. Dec.
C7	1000			SI1000	D6-102		GP2L-001	19C1	RF Amp. Fil.
C8	100			SI100N750	TCN-100		N750L-100	29C16	RF Coupling
C9	.5-3				829-3				Variable Trimmer
C10	20			SI20NPO	TCZ-20		NPOK-50		Osc. Grid Cap.
C11	10			SI10N750	TCN-10		N750K-10	19C4	Fixed Trimmer
C12	.5-3				829-3				Variable Trimmer
C13A	1000			BPD-2 x 001	DD-2-102		812-2 x 001	29C7	RF Bypass
B	1000								Conv. Fil. Bypass
C14	10	500		SI10NPO	TCZ-10		NPOK-10	MS-41	Fixed Trimmer
C15	1000			SI1000	D6-102		GP2L-001	19C1	Conv. Plate Dec.
C16	1500		928006	SI1500	D6-152	1W5D15	GP2L-0015	29C8	AGC Filter
C17	1500		928006	SI1500	D6-152	1W5D15	GP2L-0015	29C8	1st V. IF Dec.
C18	62				TCN-62		N750L-62		Fixed Trimmer
C19	.1	200		P288-1	DF-104	PTE4P1		2TM-P1	AGC Filter
C20	1500		928006	SI1500	D6-152	1W5D15	GP2L-0015	29C8	2nd V. IF Dec.
C21	1500		928006	SI1500	D6-152	1W5D15	GP2L-0015	29C8	2nd V. IF Cath. *
C22	1500		928006	SI1500	D6-152	1W5D15	GP2L-0015	29C8	3rd V. IF Dec.
C23	1500		928006	SI1500	D6-152	1W5D15	GP2L-0015	29C8	3rd V. IF Cath.
C24	25		928110	SI25	D6-250	5W5Q25	GP1K-25	19C27	IF Coupling
C25	.047	400	922025	P488-047	DF-503	PTE4S5		4TM-S47	Video Coupling
C26	.047	400	922025	P488-047	DF-503	PTE4S5		4TM-S47	Video Coupling
C27	.05	400	923105	P488-05	DF-503	PTE4S5		4TM-S5	Pic. Tube Grid
C28	5	500	910200	1468-000005	TCZ-4.7	5W5V5	GP1K-5	MS-55	S. IF Coupling
C29	1500		928006	SI1500	D6-152	1W5D15	GP2L-0015	29C8	AVC Filter
C30	5000		928109	BPD-005	DD-502	1D5D5	811-005	29C1	S. IF Dec.
C31	1500		928006	SI1500	D6-152	1W5D15	GP2L-0015	29C8	S. IF Cath.
C32	68	500	910221	SI68	D6-680	5W5Q7	GP1K-68	19C10	Limiter Grid Filter
C33	1500		928006	SI1500	D6-152	1W5D15	GP2L-0015	29C8	Limiter Dec.
C34	1500		928006	SI1500	D6-152	1W5D15	GP2L-0015	29C8	Limiter Screen
C35	110	500	910010	1468-0001	D6-121	5W5T1	GP2K-120	1FM-31	RF Bypass
C36	.001	600	923079	P688-001	D6-102	PTE6D1	GP2L-001	6TM-D1	De-emphasis
C37	.01	600	923075	P688-01	D6-103	PTE6S1	821-01	6TM-S1	Audio Coupling
C38	.005	600	923110	P688-005	D6-502	PTE6D5	811-005	6TM-D5	Audio Coupling
C39	.001	600	923079	P688-001	D6-102	PTE6D1	GP2L-001	6TM-D1	De-emphasis
C40	.01	400	923061	P488-01	D6-103	PTE4S1	821-01	4TM-S1	Audio Coupling
C41	.005	600	923110	P688-005	D6-502	PTE6D5	811-005	6TM-D5	Output Plate
C42	.047	400	922025	P488-047	DF-503	PTE4S5		4TM-S47	Sync. Coupling
C43	110	500	910010	1468-0001	D6-121	5W5T1	GP2K-120	1FM-31	Sync. Coupling
C44	5000		928109	BPD-005	DD-502	1D5D5	811-005	29C1	Sync. Sep. Screen
C45	.01	400	922015	P488-01	D6-103	PTE4S1	821-01	4TM-S1	Sync. Coupling
C46	.05	400	923105	P488-05	DF-503	PTE4S5		4TM-S5	Vert. Sync. Coupling
C47	.002	400	923083	P688-002	D6-202	PTE6D2	GP2M-002	6TM-D2	Integrator Net.
C48	.005	200	923089	P688-005	D6-502	PTE6D5	811-005	6TM-D5	Integrator Net.
C49	.005	200	923089	P688-005	D6-502	PTE6D5	811-005	6TM-D5	Integrator Net.
C50	.005	600	923110	P688-005	D6-502	PTE6D5	811-005	6TM-D5	Vert. MV Feedback
C51	.05	400	923105	P488-05	DF-503	PTE4S5		4TM-S5	Vert. MV Cath.
C52	.047	600	922023	P688-047		PTE6S5		6TM-S47	Vert. Discharge
C53	.1	600	922033	P688-1	DF-104	PTE6P1		6TM-P1	Vert. Sweep Coupling
C54	.01	600	923075	P688-01	D6-103	PTE6S1	821-01	6TM-S1	Vert. Sweep Coupling
C55	82	500	910022	1468-0001	D6-820	5W5T1	GP1K-82	1FM-31	Hor. Sync. Coupling
C56	.05	400	923105	P488-05	DF-503	PTE4S5		4TM-S5	AFC Filter

CAPACIT

ITEM No.	RATING CAP.	RATING VOLT	REPLAC EMERSON PART No.	AEROVOX PART No.	CENT PART
C57	.022	600	923082	P688-022	DF
C58	.5	200	923102	P288-5	
C59	82	500	910022	1468-0001	D6-
C60	.05	600	923111	P688-05	DF
C61	180	500	910042	1469-0002	D6-
C62	.01	600	922041	P688-01	
C63	1000	500	910027	1467-001	D6-
C64	560	500	910038	SI560	D6-
C65	.05	600	923111	P688-05	DF
C66	.25	200	923080	P488-25	
C67	10	6000	928056		
C68	1500		928006	SI1500	D6-
C69	.022	1000	922052	P1088-022	
C70	.018	1000	922051		
C71	500	20000	923016	HV20C	TV
C72	.047	400	922101	P488-047	DF
C73	.047	400	922101	P488-047	DF

* Not used in receivers coded triangle 3.
† Not used in receivers coded triange 1 and higher.

CO

ITEM No.	RATING RESIST-ANCE	RATING WATTS	REPLACEMENT DATA EMERSON PART No.	IRC PART No.	CL P
R1A	50KΩ	½	390172		
B	Shaft		Not Req.	Not Req.	RS-
R2A	2 Meg.	½	390038	Q11-139	AG-
B	Shaft		Not Req.	Not Req.	RS-
R3A	50KΩ	½	390174	Q11-123	AG-
B	Shaft		Not Req.	Not Req.	RS-
R4A	1500Ω	½	390169		RT
B	1 Meg.	½			
R5A	50KΩ	½	390133	Q11-123	AG-
B	Shaft		Not Req.	Not Req.	FKS
R6	5000Ω	2	390143	W-5000	43-
R7A	2 Meg.	½	390142	Q11-139	AM-
B	Shaft		Not Req.	Not Req.	FKS

Note. Some models use control with part number 3901

R

ITEM No.	RATING RESISTANCE	RATING WATTS	REPLACEMENT DATA EMERSON PART No.	IRC PART No
R8	3900Ω	½		BTS-3900
R9	47KΩ	½		BTS-47K
R10	10KΩ 20%	½		
R11	2200Ω 20%	½		BTS-2200
R12	4700Ω	½		BTS-4700
R13	220KΩ 20%	½		
R14	10KΩ 20%	½		
R15	10KΩ	½		
R16	4700Ω	½		BTS-4700
R17	18KΩ	½		
R18	470Ω	½	340412	BTS-470
R19	150Ω 20%	½	340292	BTS-150
R20	150Ω 20%	½	340292	BTS-150
R21	5600Ω	½	340672	
R22	68Ω	½	340212	
R23	1000Ω	½	340492	BTS-1000
R24	10KΩ	½	340732	
R25	150Ω	½	340292	BTS-150
R26	1000Ω	½	340492	BTS-1000
R27	10KΩ	½	340732	
R28	220Ω	½	340332	BTS-220
R29	1000Ω	½	340492	BTS-1000
R30	4700Ω	½	340652	BTS-4700
R31	22KΩ 20%	½	340812	BTS-22K
R32	100KΩ	½	340972	BTS-100K
R33	1 Meg.	½	341212	BTS-1 Meg.
R34	1 Meg.	½	341212	BTS-1 Meg.
R35	15KΩ	½	340772	BTS-15K
R36	1 Meg.	½	341212	BTS-1 Meg.
R37	10Ω	½	340012	BW-½-10
R38	6800Ω 5%	2	397063	BTB-6800-
R39	15KΩ	½	340772	BTS-15K
R40	220KΩ	½	341052	BTS-220K
R41	47KΩ	½	340892	BTS-47K
R42	220KΩ	½	341052	BTS-220K
R43	1000Ω	½	340492	BTS-1000
R44	220Ω	½	340332	BTS-220
R45	1 Meg.	½	341212	BTS-1 Meg.
R46	47KΩ	½	340892	BTS-47K
R47	1000Ω	½	340492	BTS-1000
R48	22KΩ	1	370812	BTA-22K
R49	10KΩ	½	340732	BTS-10K
R50	68KΩ	½	340932	BTS-68K
R51	100KΩ	½	340972	BTS-100K
R52	100KΩ	½	340972	BTS-100K
R53	10 Meg. 20%	½	351452	BTS-10 Meg
R54	220KΩ	½	341052	BTS-220K
R55	470KΩ	½	341132	BTS-470K
R56	560Ω	2	397001	BTB-560
R57	1 Meg.	½	341212	BTS-1 Meg.
R58	10KΩ	½	340732	BTS-10K
R59	47KΩ	½	340892	BTS-47K
R60	2.2 Meg.	½	341292	BTS-2.2 Me
R61	100KΩ	½	340972	BTS-100K
R62	47KΩ	1	370892	BTA-47K
R63	47KΩ	½	340892	BTS-47K

DESCRIPTIONS

RS (CONT.)

ENT DATA				IDENTIFICATION CODES AND INSTALLATION NOTES
.AB o.	CORNELL-DUBILIER PART No.	ERIE PART No.	SPRAGUE PART No.	
3	PTE6S2		6TM-S22	AFC Filter
	GT2P5		2TM-P5	AFC Filter
)	5W5T1	GP1K-82	1FM-31	Hor. Feedback
3	PTE6S5		6TM-S5	Hor. AFC Plate
	5R5T2	GP2K-180	MS-32	Hor. Osc. Grid
	PTE6S1		6TM-S1	Fixed Trimmer
	1W5D1	GP2L-001	1FM-21	Hor. Discharge
	5R5T5	GP2K-560	MS-35	Hor. Sweep Coupling
3	PTE6S5		6TM-S5	Hor. Output Screen
	GT2P25		2TM-P25	Hor. Output Cath.
				Fixed Trimmer
	1W5D15	GP2L-001	29C8	RF Bypass
			MB-S22	Damper Filter
				Damper Filter
)2				HV Filter †
3	PTE4S5		4TM-S47	Line Filter
3	PTE4S5		4TM-S47	Line Filter

NTROLS

)STAT No.	CENTRALAB PART No.	INSTALLATION NOTES
		Brightness control
	AK-4	Attach to R1A per instructions
-S	AN-75	Vert. hold control-See Note
	AK-4	Attach to R2A per instructions
-S	AN-31	Horiz. hold control
	AK-4	Attach to R3A per instructions
43		Contrast control-front
		Volume control and switch-rear
-S	AN-31	Focus control
'4	AK-1	Attach to R5A per instructions
0	VK-135	Vert. linearity control-Wire Wound
-S	AN-75	Vert. size control
'4	AK-1	Attach to R7A per instructions

in this application.

ISTORS

IDENTIFICATION CODES
ALL RESISTORS ARE ± 10% UNLESS OTHERWISE STATED.
Antenna Coil Shunt
AGC Network
RF Coil Shunt
RF Amp. Decoupling
Mixer Grid
Mixer Grid
Mixer Decoupling
Osc. Grid
Osc. Plate
1st Video IF Transformer Shunt
Tuner Decoupling
AGC Network
AGC Network
1st Video IF Amp. Grid
1st Video IF Amp. Cathode
1st Video IF Amp. Decoupling
2nd Video IF Amp. Grid
2nd Video IF Amp. Cathode-See Note 2
2nd Video IF Amp. Decoupling
3rd Video IF Transformer Shunt
3rd Video IF Amp. Cathode
3rd Video IF Amp. Decoupling
Video Det. Diode Load
AGC Network
AGC Network
AGC Network
Bias Network
Voltage Divider
Video Amp. Grid
Video Amp. Cathode-See Note 1
Video Amp. Plate
Video Peaking Coil Shunt
Retrace Blanking Network
Voltage Divider
Picture Tube Cathode
Bias Network
Sound IF Amp. Cathode
AVC Network
Limiter Grid
Limiter Cathode
Limiter Screen
Limiter Decoupling
De-emphasis
Disc. Diode Load
Disc. Diode Load
AF Amp. Grid
AF Amp. Plate
Output Grid
Output Cathode
Voltage Divider
Sync. Amp. Grid
Sync. Amp. Plate
Sync. Sep. Grid
Sync. Sep. Grid
Sync. Sep. Screen
Sync. Sep. Plate

RESISTORS (CONT.)

ITEM No.	RATING		REPLACEMENT DATA		IDENTIFICATION CODES
	RESISTANCE	WATTS	EMERSON PART No.	IRC PART No.	
R64	10KΩ	½	340732	BTS-10K	Voltage Divider
R65	2.2 Meg.	½	341292	BTS-2.2 Meg.	Phase Inverter Grid
R66	220Ω	½	340332	BTS-220	Phase Inverter Cathode
R67	1000Ω	½	340492	BTS-1000	Phase Inverter Plate
R68	22KΩ	½	340812	BTS-22K	Voltage Divider
R69	22KΩ	½	340812	BTS-22K	Integrator
R70	8200Ω	½	340712	BTS-8200	Integrator
R71	8200Ω	½	340712	BTS-8200	Integrator
R72	680KΩ 5%	½	331172	BTS-680K-5%	Vert. MV Grid
R73	2200Ω	½	340572	BTS-2200	Vert. MV Cathode
R75	150KΩ	1	361012	BTA-150	Vert. MV Plate
R75	470KΩ	½	341132	BTS-470K	Vert. MV Plate
R76	8200Ω	½	340712	BTS-8200	Vert. Peaking
R77	3.3 Meg.	½	341332	BTS-3.3 Meg.	Vert. Output Grid
R78	470Ω	½	340412	BTS-470	Vert. Output Cathode
R79	1000Ω	2	397060	BTB-1000	Vert. Output Decoupling
R80	150KΩ	1	361012	BTA-150K	Voltage Divider
R81	330KΩ	½	341092	BTS-330K	Horiz. AFC Grid
R82	820KΩ	½	341192	BTS-820K	Horiz. AFC Grid
R83	82KΩ	1	370952	BTA-82K	Horiz. AFC Cathode
R84	330KΩ 5%	1	361092	BTA-330K-5%	Horiz. AFC Cathode
R85	3900Ω	½	340632	BTS-3900	Horiz. AFC Filter
R86	82KΩ	1	370952	BTA-82K	Horiz. AFC Plate
R87	10KΩ	½	340732	BTS-10K	Decoupling
R88	150KΩ	1	361012	BTA-150K	Horiz. Osc. Grid
R89	82KΩ	1	370952	BTA-82K	Horiz. Osc. Plate
R90	8200Ω	½	340712	BTS-8200	Horiz. Osc. Transformer Shunt
R91	150KΩ	½	341012	BTS-150K	Horiz. Feedback
R92	68Ω	½	340212		Parasitic Suppressor
R93	1 Meg.	½	341212	BTS-1 Meg.	Horiz. Output Grid
R94	100Ω	1	370252	BTA-100	Horiz. Output Cathode
R95	10KΩ	2	397012	BTB-10K	Horiz. Output Screen
R96	750Ω	10	394108	1 3/4A-750	Horiz. Size Coil Shunt-Wire Wound
R97	1 Meg. 20%	1	381212		HV Filter-See Note 1
R98	2500Ω	10	394005	1 3/4A-2500	Filter-Wire Wound
R99	5000Ω	10	394112	1 3/4A-5000	Bias Network-Wire Wound
R100	100KΩ	1	370972	BTA-100K	Isolation

Note 1. Not used in all models.
Note 2. Some models use 100Ω resistor in this application.

TRANSFORMER (POWER)

ITEM No.	RATING				REPLACEMENT DATA			
	PRI.	SEC. 1	SEC. 2	SEC. 3	EMERSON PART No.	STANCOR PART No.	MERIT PART No.	CHICAGO PART No.
T1	117VAC ⓐ 1.7A	720VCT .200ADC	5VAC ⓐ 3A	6.3VAC ⓐ 1.2A SEC. 4 6.3VAC ⓐ 3.5A SEC. 5 6.3VAC ⓐ 3.3A	730029		P-3174 ④	

④ Add series resistor to reduce plate voltage.

TRANSFORMER (SWEEP CIRCUITS)

ITEM No.	RATING		REPLACEMENT DATA				NOTES
	DC RESISTANCE		EMERSON PART No.	STANCOR PART No.	MERIT PART No.	CHICAGO PART No.	
	PRI.	SEC.					
T2	495Ω Tap ⓐ 125Ω	0Ω	738053				Horiz. Output Trans.
T3	440Ω	.4Ω	738044				Vert. Output Trans.
T4	2.3KΩ		708063 ② 708058 ③				Focus Coil
T5A	42Ω		708064				Horiz. Deflection Yoke
B	3.3Ω						Vert. Deflection Yoke

② Used in chassis 120127-B.
③ Used in chassis 120128-B.

TRANSFORMER (AUDIO OUTPUT)

ITEM No.	RATING				REPLACEMENT DATA				INSTALLATION NOTES
	IMPEDANCE		DC RES.		EMERSON PART No.	STANCOR PART No.	MERIT PART No.	CHICAGO PART No.	
	PRI.	SEC.	PRI.	SEC.					
T6	5.8KΩ	4.4Ω	320Ω	.65Ω	734051	A-3849	A-3019	RO-9 ①	① Drill one new mounting hole.

SPEAKER

ITEM No.	RATINGS		REPLACEMENT DATA			NOTES
	FIELD RES.	V. C. IMP.	EMERSON PART No.	JENSEN PART No.	QUAM PART No.	
SP1	PM	4.1Ω	180075	ST-105 MOD. P5-X	5A1	
	CONE DIA.	V. C. DIA.				
SP2	4 1/2"	9/16"				

PARTS LIST AND DESCRIPTIONS (Continued)

FILTER CHOKE

ITEM No.	RATINGS			REPLACEMENT DATA				INSTALLATION NOTES
	TOTAL DIRECT CURRENT	D. C. RESISTANCE	INDUCTANCE (0 CURRENT 1000 ∽)	EMERSON PART No.	STANCOR PART No.	MERIT PART No.	CHICAGO PART No.	
L1	.170ADC	100Ω	3.7 Henries	737011	C-1410 ①	C-2991 ①	TR-3300 ①	① Drill one new mounting hole.

COILS (RF-IF)

ITEM No.	USE	DC RES.		REPLACEMENT DATA		NOTES
		PRI.	SEC.	EMERSON PART No.	MEISSNER PART No.	
L2	Ant. Coil	0Ω	0Ω			Part of tuner, part #470652
L3	Fil. Choke	0Ω				Part of tuner, part #470652
L4	RF, Mixer Grid & Osc. Coils	0Ω				Part of tuner, part #470652
L5	Fil. Choke	0Ω				Part of tuner, part #470652
L6	1st Video IF Primary	.3Ω				Part of tuner, part #470652
L7	1st Video IF Secondary	.3Ω				Part of tuner, part #470652
L8	2nd Video IF	.4Ω	.4Ω	720129		
L9A	3rd Video IF	1.1Ω	1.4Ω	720127		
B	3rd Video IF			720128		Alternate
L10A	4th Video IF	1.1Ω	1.4Ω	720127		
B	4th Video IF			720128		Alternate
L11	Peaking	8.8Ω		708094	19-1921	125 microhenries, green dot
L12	Peaking	21Ω		708115		660 microhenries, yellow dot
L13	Peaking	17Ω		708114	19-1923	440 microhenries, blue dot
L14	Peaking	21Ω		708115		660 microhenries, yellow dot
L15	1st Sound IF	4.5Ω		708097		45 microhenries
L16	2nd Sound IF	2.2Ω	2.2Ω	720081		
L17	Disc. Trans.	2.2Ω	2.2Ω	708071		
L18	Horiz. Osc.	130Ω		716052		
L19	Horiz. Phasing Coil	55Ω		738037		
L20	Horiz. Lin.	38Ω		708003		
L21	Horiz. Size	4.2Ω		708058		

FUSES

ITEM No.	TYPE	RATING	REPLACEMENT DATA				REMARKS
			EMERSON PART No.		LITTELFUSE PART No.		
			FUSE	HOLDER	FUSE	HOLDER	
M1	3AG Pig Tail	1/4A	808170		318.250		

MISCELLANEOUS

ITEM No.	PART NAME	EMERSON PART No.	NOTES
M2	RF Tuner	470652	
M3A	Ion Trap	708061	Chassis 120127-B
B	Ion Trap	708065	Chassis 120128-B
B3	Trimmer	900054	Horiz. drive 25-300MMF
	Safety Glass	625033	Model 662B
	Safety Glass	635034	Model 663B
	Knob	460173	Channel selector
	Knob	460174	Fine tuning
	Knob	460171	Contrast
	Knob	460172	Volume

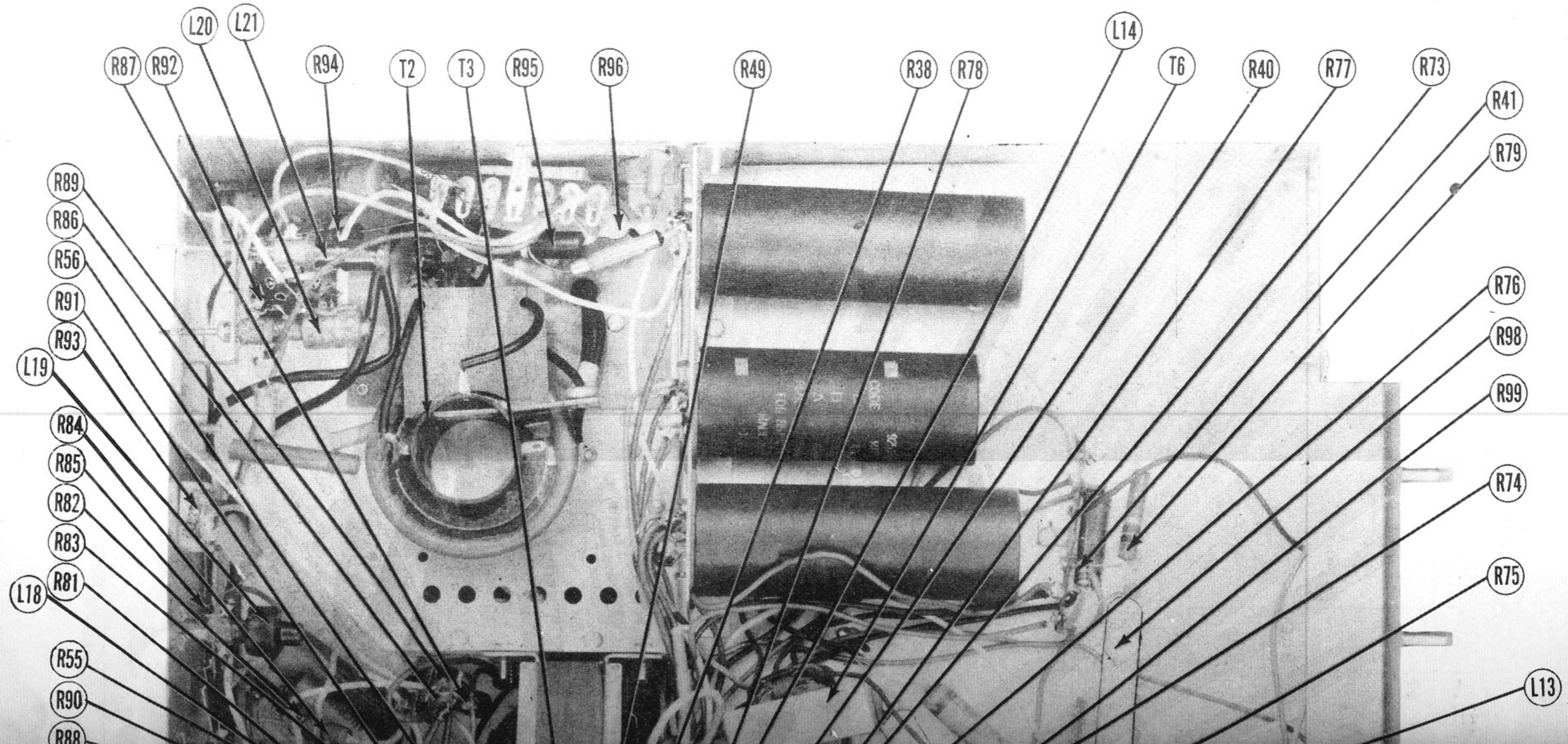
L20
L21
R87
R92
R94
T2
T3
R95
R96
R49
R38
R78
L14
T6
R40
R77
R73
R41
R79
R89
R86
R56
R91
R93
L19
R84
R85
R82
R83
R81
L18
R55
R90
R88
R76
R98
R99
R74
R75
L13

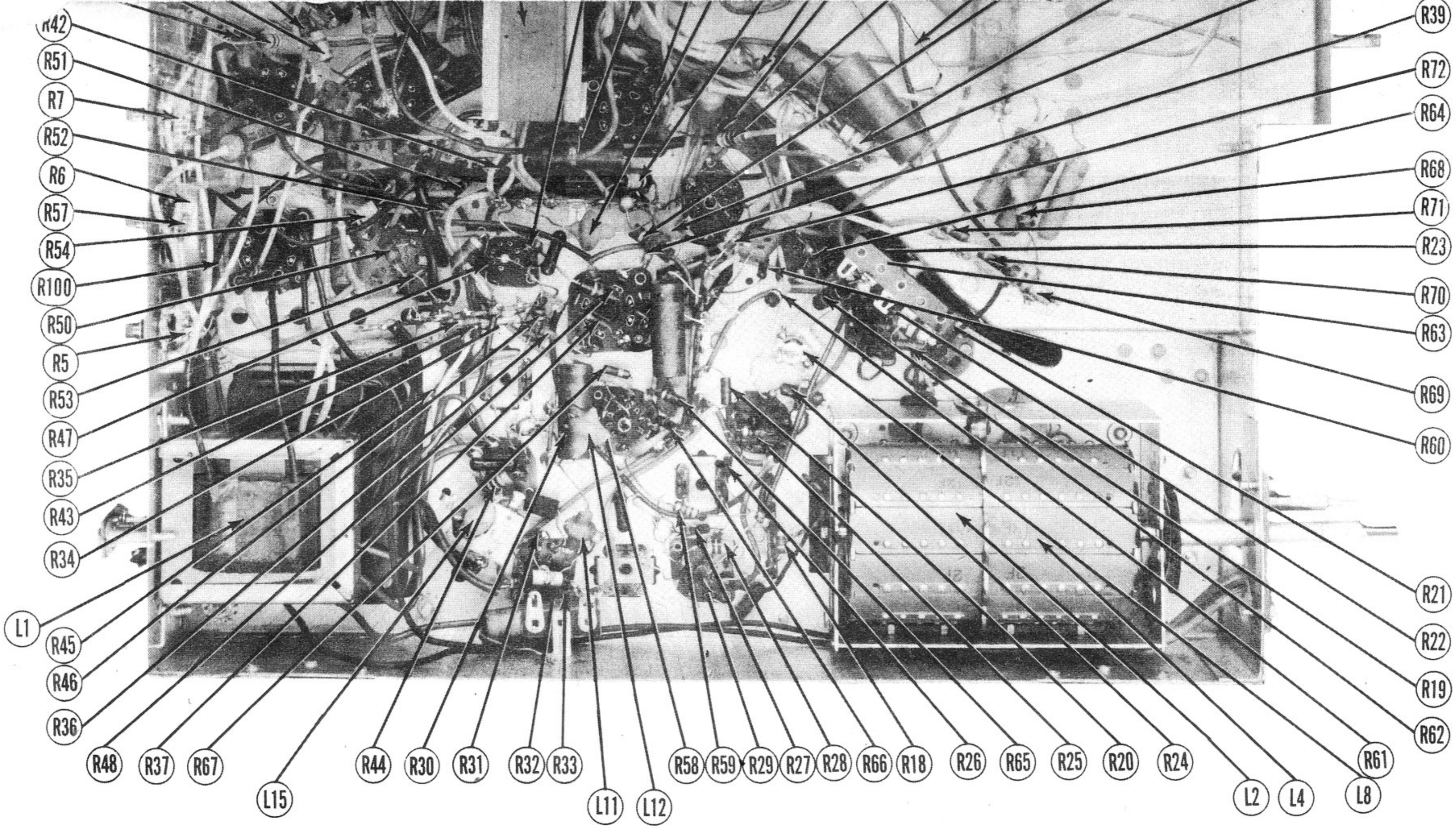

CHASSIS BOTTOM VIEW-RESISTOR AND INDUCTOR IDENTIFICATION