www.ke3gk.com

MODELS 1007, 1207, 1208

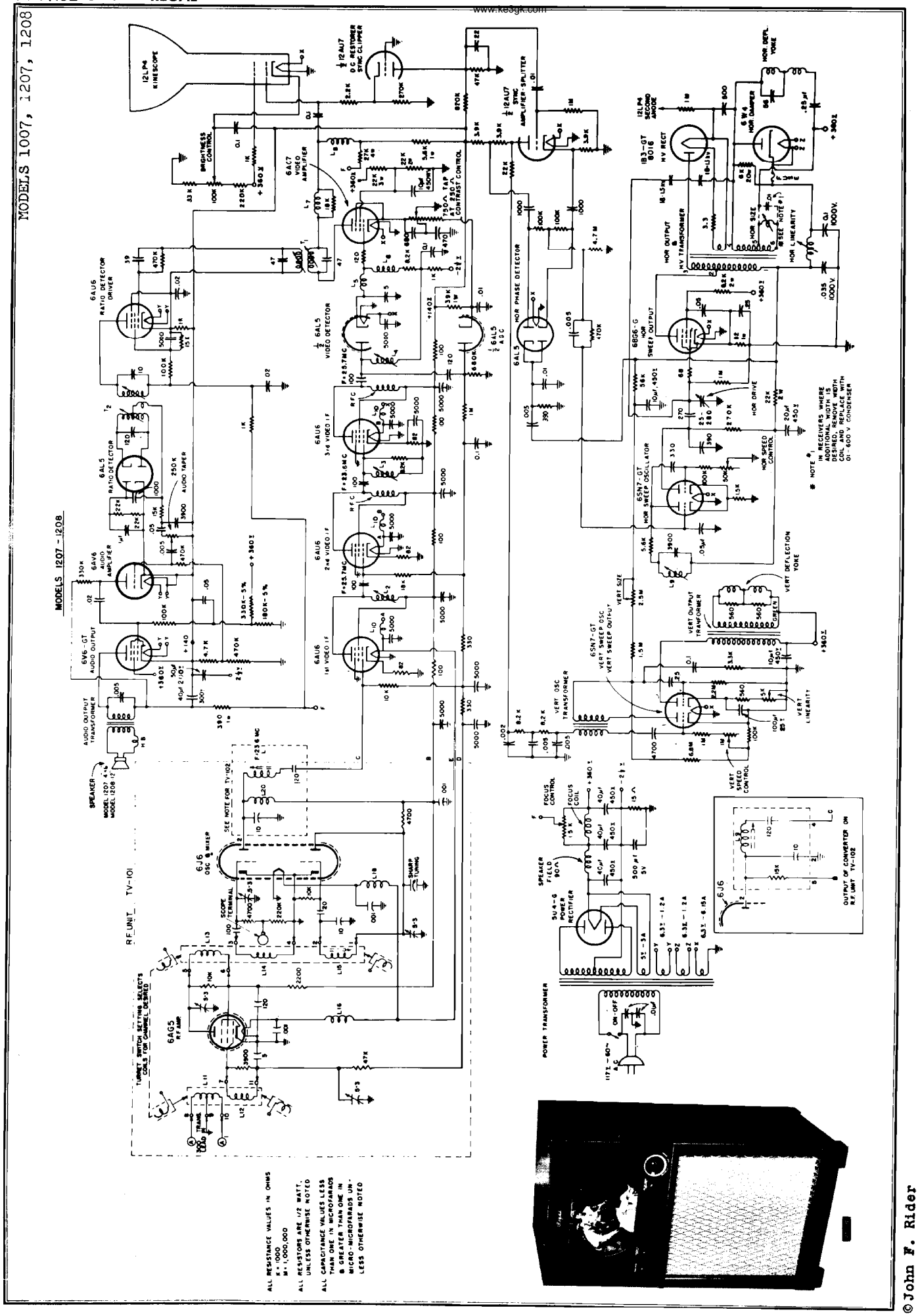

© John F. Rider

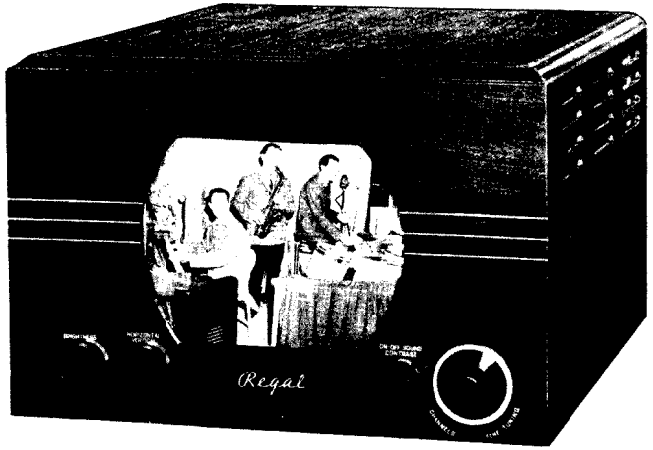

1007

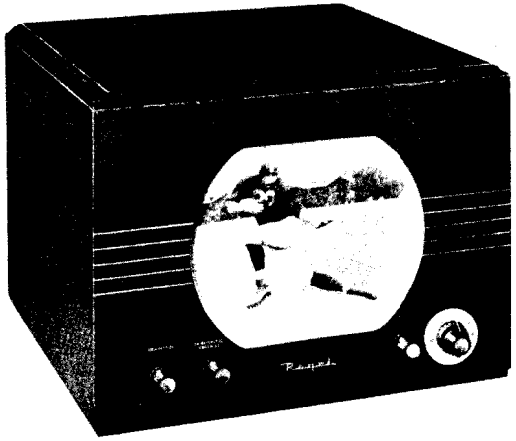

1207

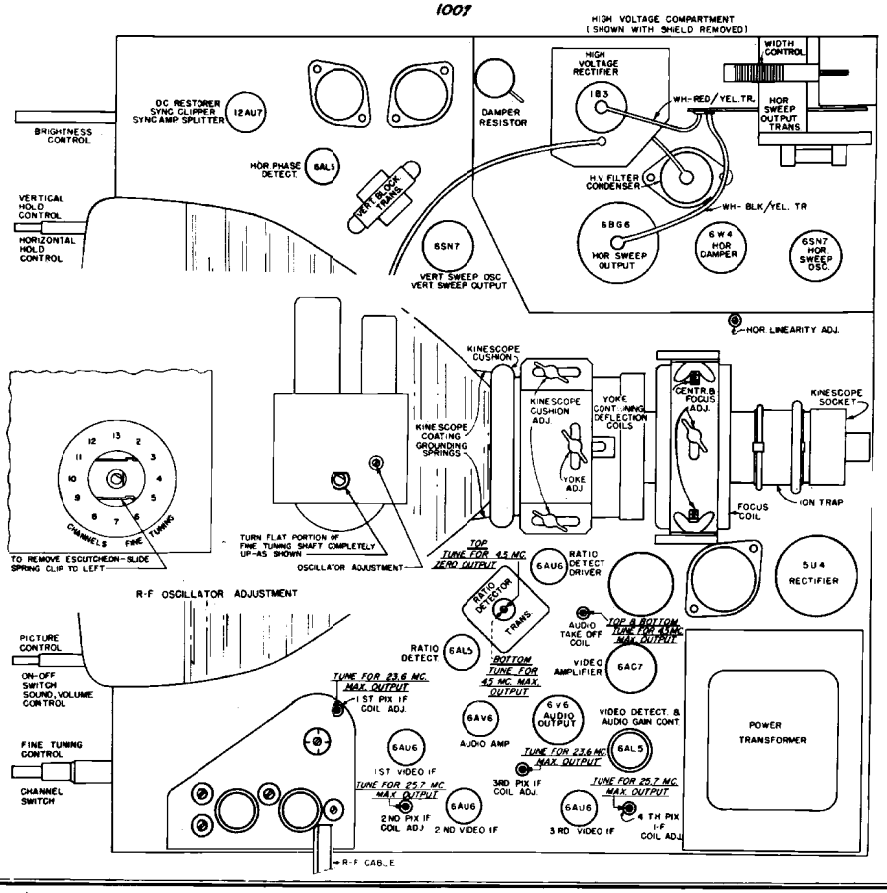

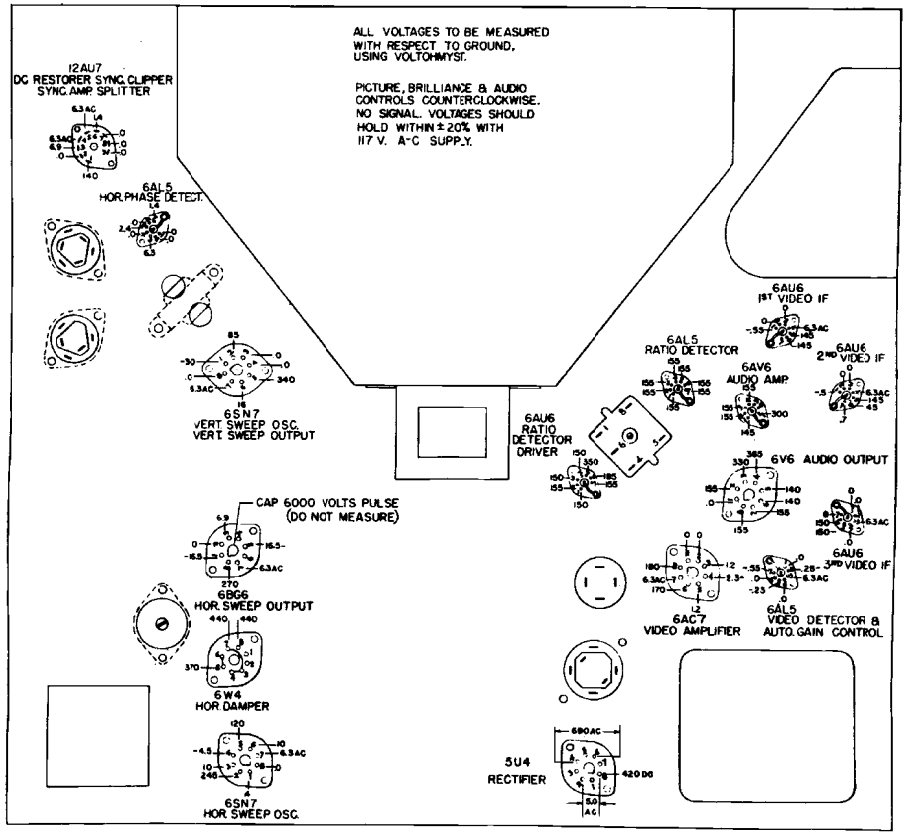

www.ke3gk.com

© John F. Rider