PHOTOFACT* Folder

*TRADE MARK

GENERAL ELECTRIC MODEL 810

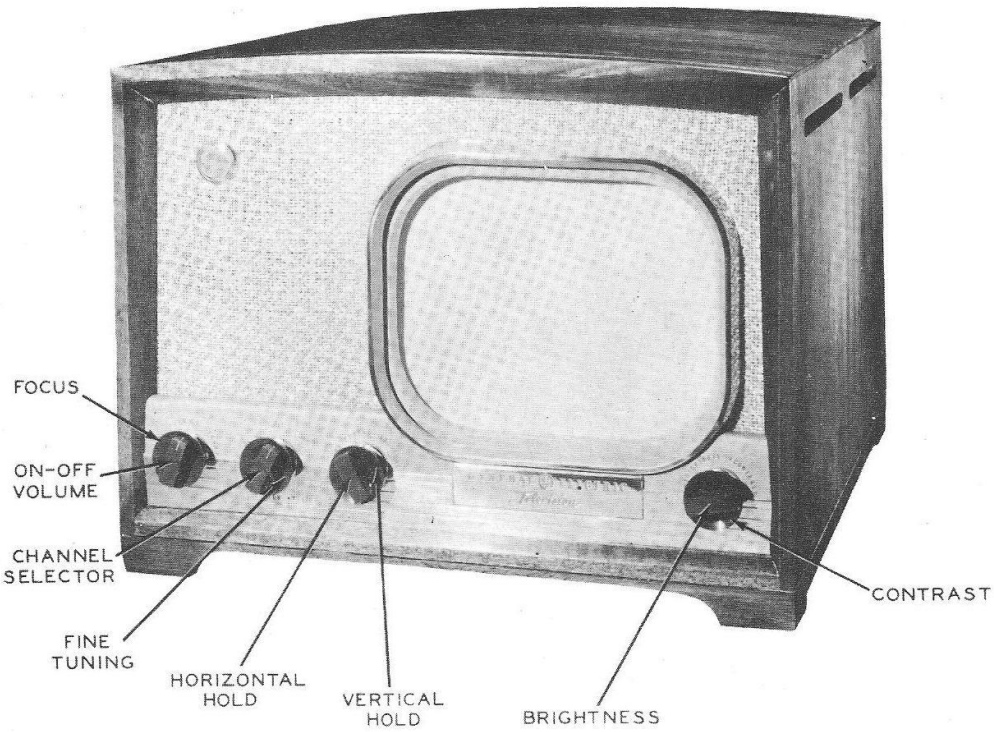

GENERAL ELECTRIC MODEL 810

TRADE NAME	General Electric, Model 810
MANUFACTURER	General Electric Co., Electronics Dept., Electronics Park, Syracuse, N. Y.
TYPE SET	Television Receiver
TUBES	Twenty-Two
POWER SUPPLY	117 Volts, 60 Cycle AC RATING 2 Amps. @ 117 Volts AC
TUNING RANGE—	Channels 2 through 13

TABLE OF CONTENTS

	Page		Page
Schematic	2	Cabinet-Rear View	11
Chassis-Top View	3	Chassis Bottom View-Resistor Identification	12,17
Parts List and Description	5,8,11	Chassis Bottom View-Capacitor Identification	13,16
Alignment Instructions	7	Voltage and Resistance Measurements	14
Horizontal Frequency Adjustment	7	Tube Placement Chart	15
		Block Diagram	18
Chassis Bottom View-Trans., Inductor & Alignment Identification.	9	Disassembly Instructions	19
RF Tuner-Right Side	10	Centering Adjustments	19
RF Tuner Left Side	10	Horizontal Linearity Adjustments	19

GENERAL ELECTRIC MODEL 810

HOWARD W. SAMS & CO., INC. • Indianapolis 7, Indiana

"The listing of any available replacement part herein does not constitute in any case a recommendation, warranty or guaranty by Howard W. Sams & Co., Inc., as to the quality and suitability of such replacement part. The numbers of these parts have been compiled from information furnished to Howard W. Sams & Co., Inc., by the manufacturers of the particular type of replacement part listed." "Reproduction or use, without express permission, of editorial or pictorial content, in any manner, is prohibited. No patent liability is assumed with respect to the use of the information contained herein. Copyright 1949 by Howard W. Sams & Co., Inc., Indianapolis 7, Indiana, U. S. of America. Copyright under International Copyright Union. All rights reserved under Inter-American Copyright Union (1910) by Howard W. Sams & Co., Inc." Printed in U. S. of America

DATE 1/49-#491-12 SET #53-FOLDER #12

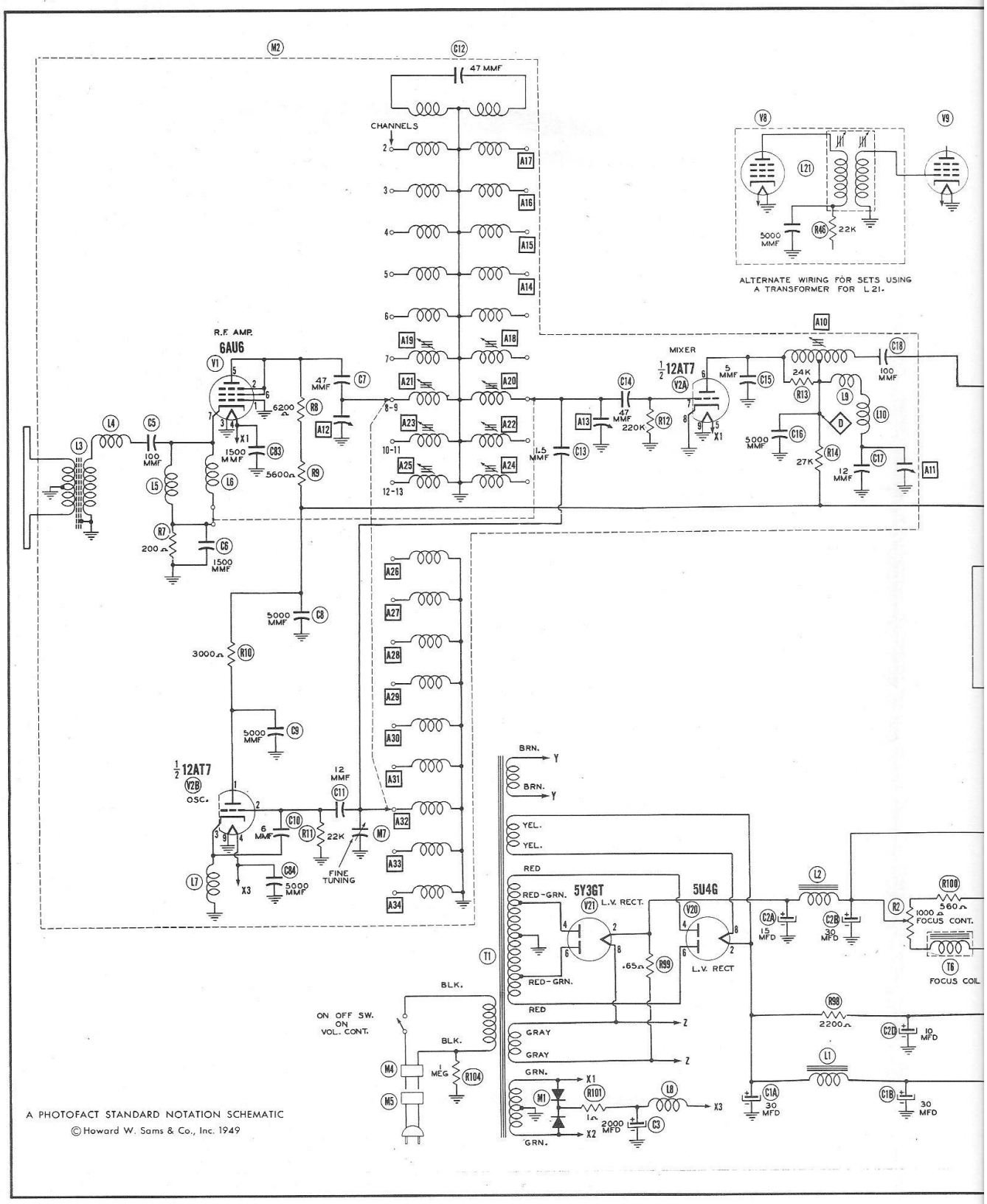

A PHOTOFACT STANDARD NOTATION SCHEMATIC

©Howard W. Sams & Co., Inc. 1949

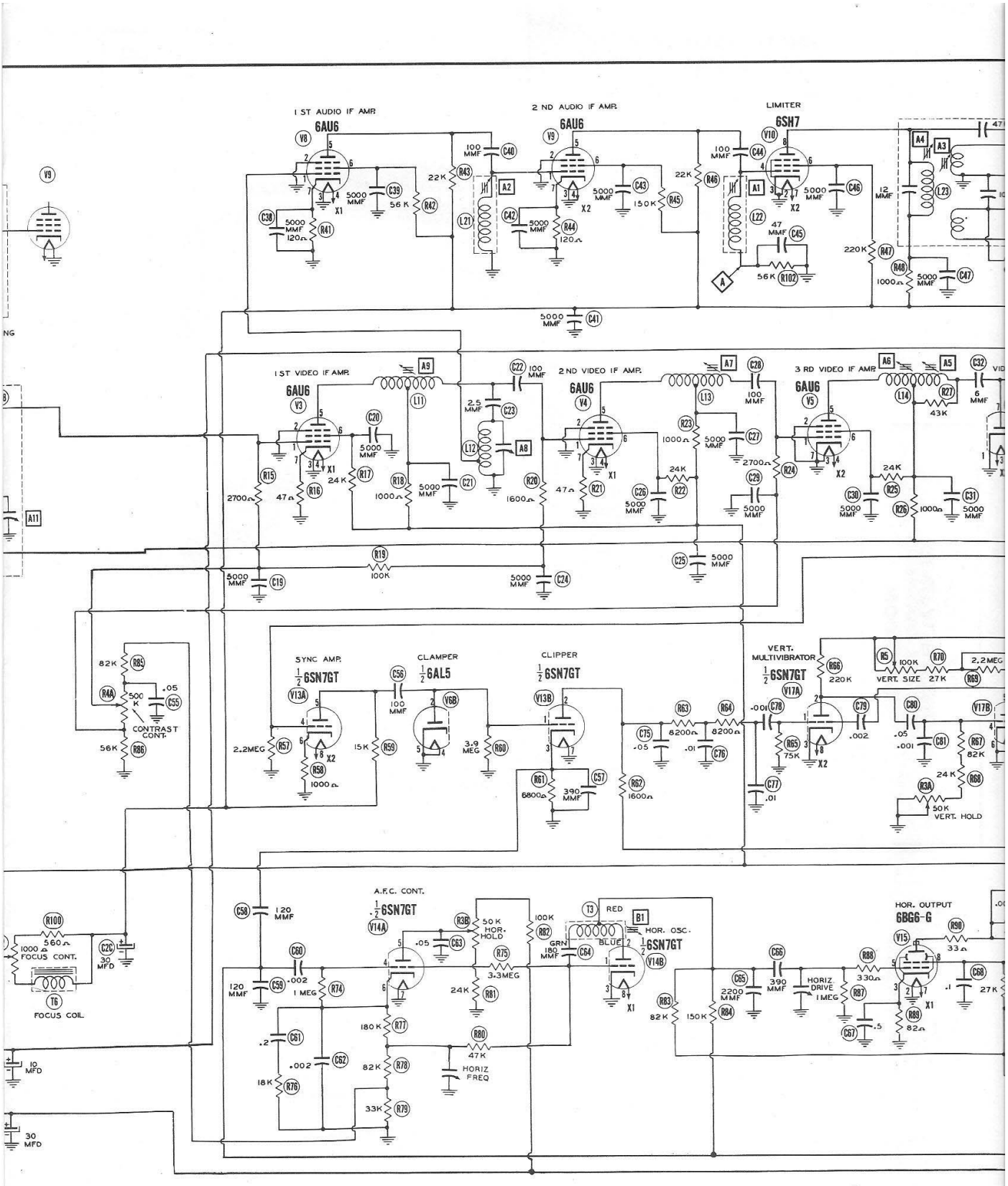
1 ST AUDIO IF AMP.
6AU6
2 ND AUDIO IF AMP.
6AU6
LIMITER
6SH7
1 ST VIDEO IF AMP.
6AU6
2 ND VIDEO IF AMP.
6AU6
3 RD VIDEO IF AMP.
6AU6
SYNC AMP.
½ 6SN7GT
CLAMPER
½ 6AL5
CLIPPER
½ 6SN7GT
VERT. MULTIVIBRATOR
½ 6SN7GT
VERT. SIZE
VERT. HOLD
CONTRAST CONT.
A.F.C. CONT.
½ 6SN7GT
HOR. OSC.
½ 6SN7GT
HOR. OUTPUT
6BG6-G
HOR. HOLD
HORIZ. DRIVE
HORIZ. FREQ.
FOCUS CONT.
FOCUS COIL
RED
BLUE
GRN

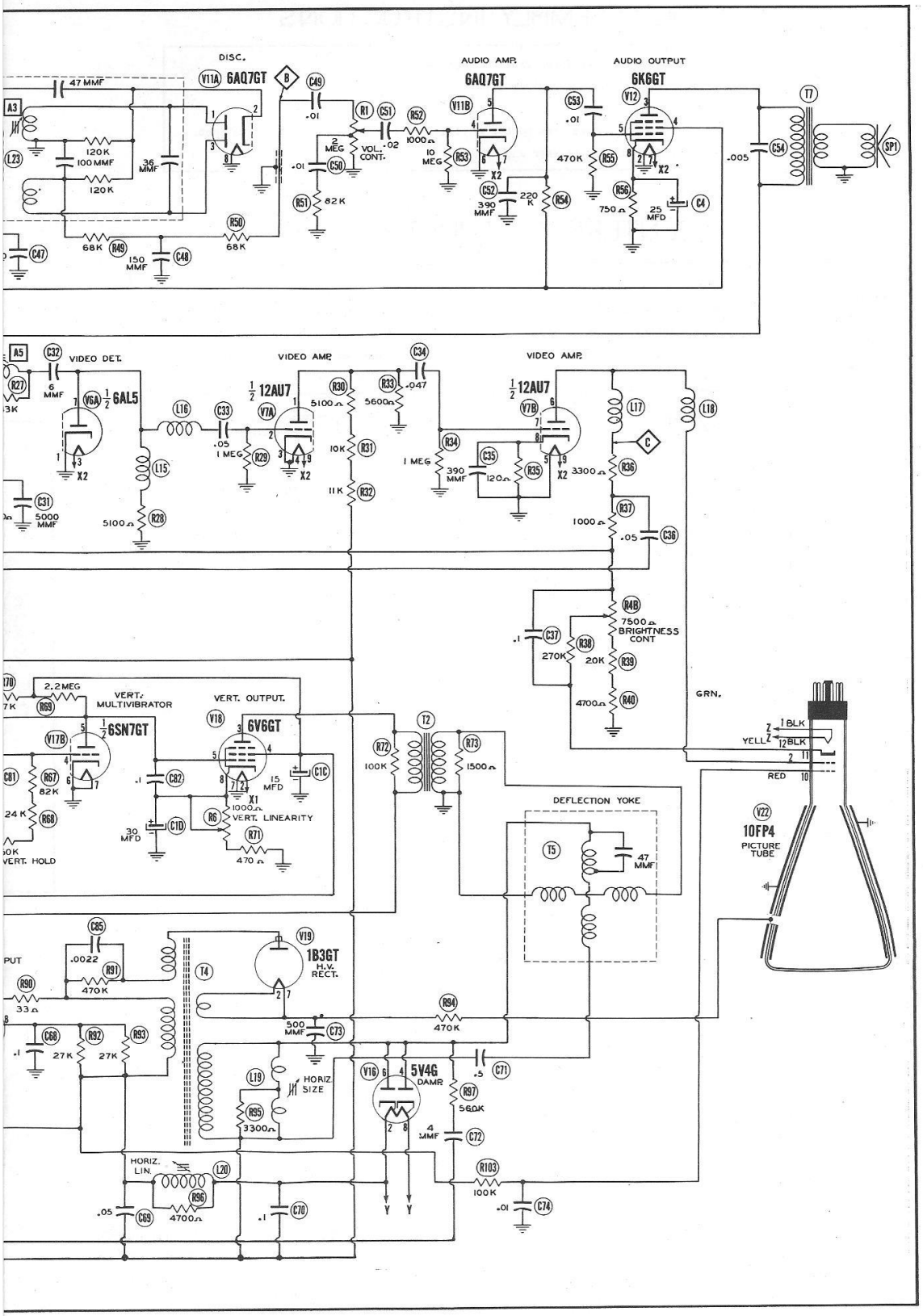

GENERAL ELECTRIC
MODEL 810

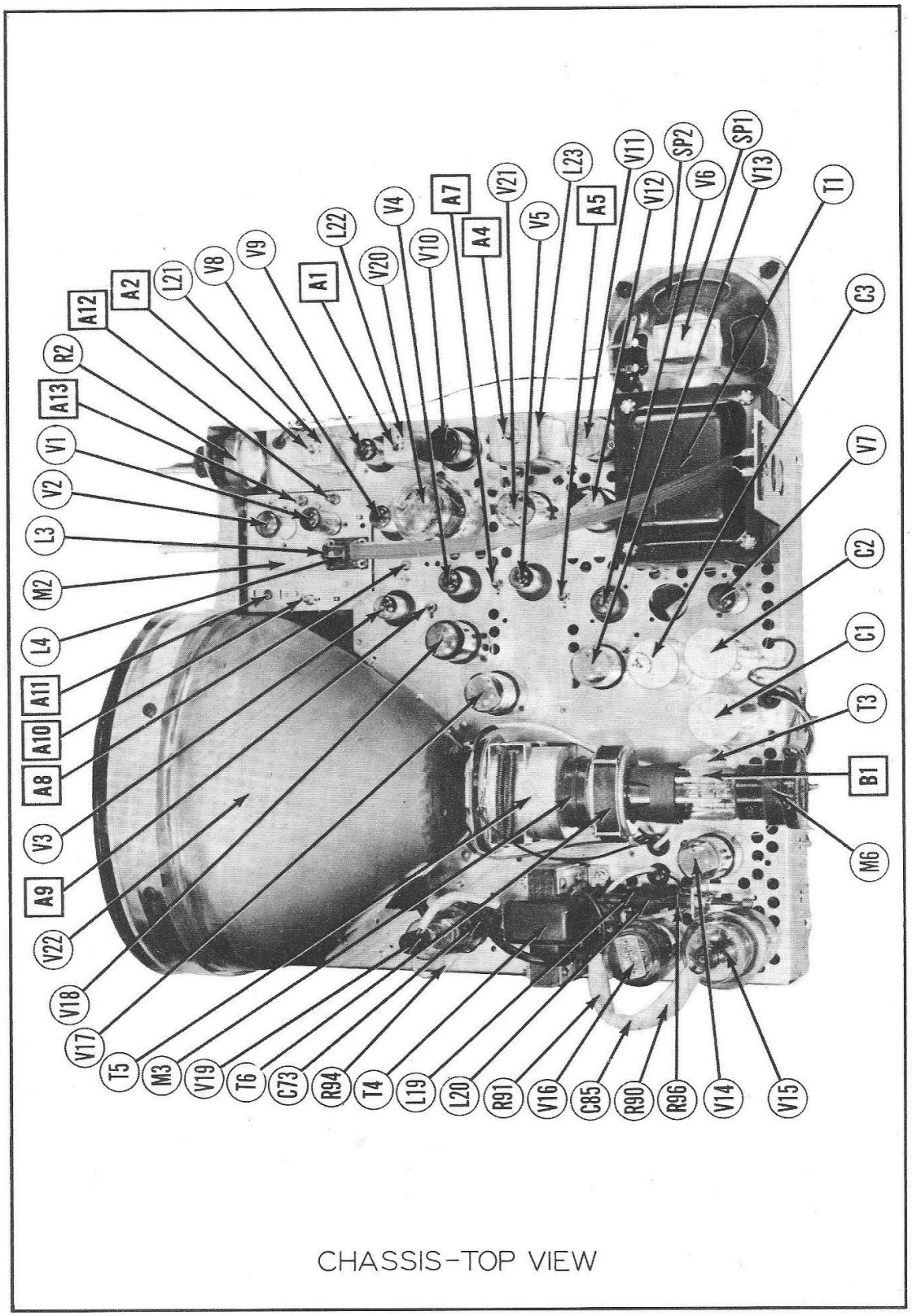

CHASSIS-TOP VIEW

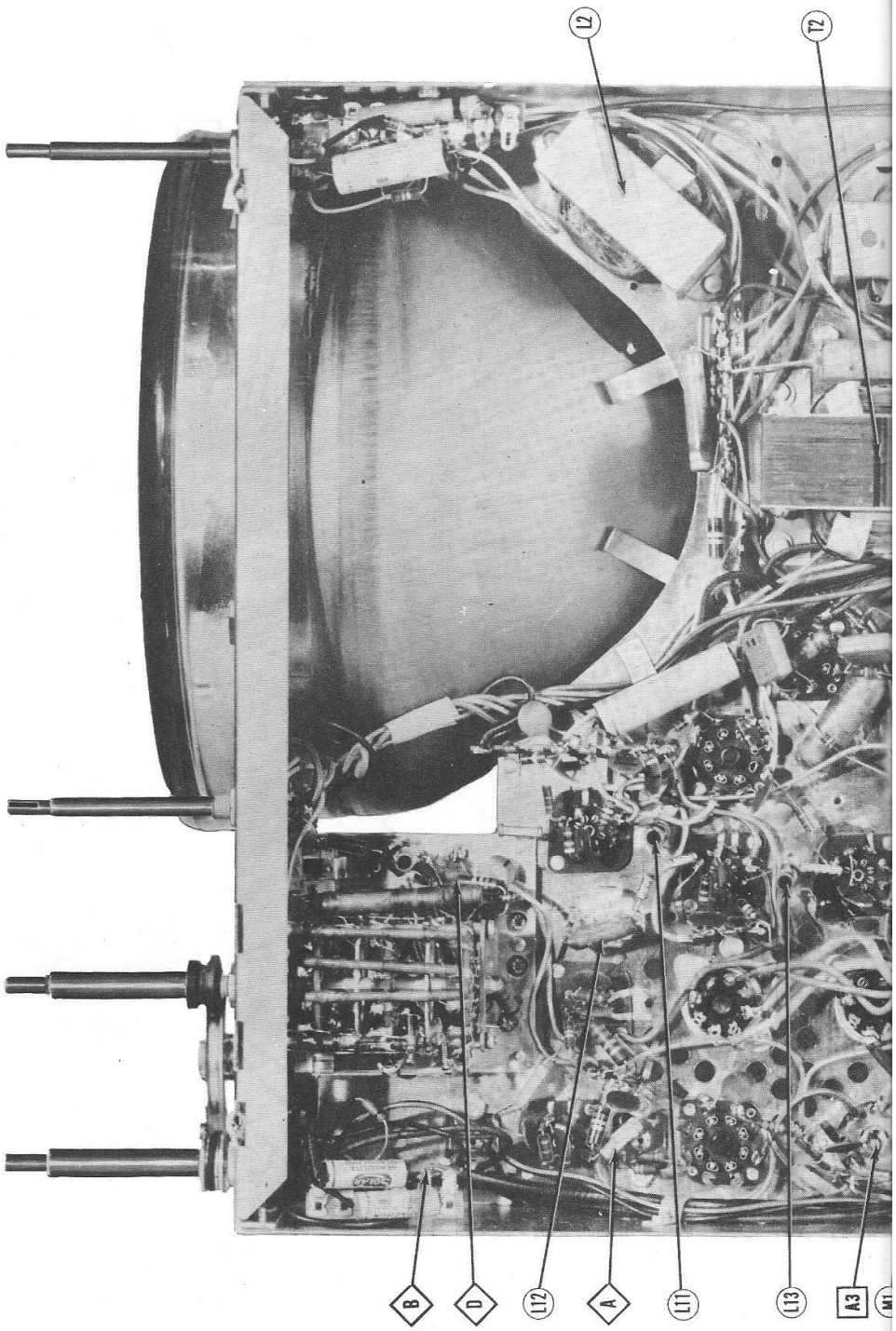
B
D
L12
A
L11
L13
A3
L2
T2

GENERAL ELECTRIC
MODEL 810

PARTS LIST AND DESCRIPTIONS

TUBES

ITEM No.	USE	REPLACEMENT DATA: GENERAL ELECTRIC PART No.	REPLACEMENT DATA: STANDARD REPLACEMENT	RMA BASE TYPE	NOTES
V1	RF Amp.	6AU6	6AU6	7BK	
V2	Mixer	12AT7	12AT7	9A	
V3	1st V. IF Amp.	6AU6	6AU6	7BK	
V4	2nd V. IF Amp.	6AU6	6AU6	7BK	
V5	3rd V. IF Amp.	6AU6	6AU6	7BK	
V6	Video Det.-Clamper	6AL5	6AL5	6BT	
V7	Video Amp.	12AU7	12AU7	9A	
V8	1st A. IF Amp.	6AU6	6AU6	7BK	
V9	2nd A. IF Amp.	6AU6	6AU6	7BK	
V10	Limiter	6SH7	6SH7	8BK	
V11	Disc.-Audio Amp.	6AQ7GT	6AQ7GT		
V12	Audio Output	6K6GT	6K6GT	7S	
V13	Sync. Amp.-Clipper	6SN7GT	6SN7GT	8BD	
V14	AFC Cont.-Hor. Osc.	6SN7GT	6SN7GT	8BD	
V15	Hor. Output	6BG6G	6BG6G	5BT	
V16	Damping	5V4G	5V4G	5L	
V17	Vert. Mult.	6SN7GT	6SN7GT	8BD	
V18	Vert. Output	6V6GT	6V6GT	7AC	
V19	H. V. Rect.	1B3GT	1B3GT	3C	
V20	L. V. Rect.	5U4G	5U4G	5T	
V21	L. V. Rect.	5Y3GT	5Y3GT	5T	
V22	Pict. Tube	10FP4	10FP4		

CAPACITORS

Capacity values given in the rating column are in mfd. for Electrolytic and Paper Capacitors, and in mmfd. for Mica and Ceramic Capacitors.

ITEM No.	RATING: CAP.	RATING: VOLT	REPLACEMENT DATA: GENERAL ELECT. PART No.	AEROVOX PART No.	CORNELL-DUBILIER PART No.	SOLAR PART No.	SPRAGUE PART No.	IDENTIFICATION CODES AND INSTALLATION NOTES
C1A	30	450	RCE-070	AF862J4A	UP9D919-1		D10308	◓ Filter
B	30	450						■ "
C	15	450						▲ Vert. Out. Screen
D	30	50						Vert. Out. Cath.
C2A	15	450	RCE-071		UP9D984-1		D10301	◓ Filter
B	30	450						■ "
C	30	450						▲ "
D	10	450						"
C3	2000	6	RCE-083	PRS6-2000	BRH620	DY-2000-15	D12115	Audio Out. Cath. Byp.
C4	25	25	UCE-065	PRS25-25	BR252A	M-25-25	TA-25	RF Coupling Cer
C5	100		RCW-1047	1468-0001	5W5T1	MO.5-31	1FM-31	RF Cath. "
C6	1500		RCW-026					RF Coupling "
C7	47		RCW-1052					RF Bypass "
C8	5000		RCW-3014					Osc. Plate Byp. "
C9	5000		RCW-3014					Osc. Feedback "
C10	6		RCW-2030					Osc. Grid "
C11	12		RCW-2006					Fixed Trimmer "
C12	47		RCW-2010					Osc. Coupling "
C13	1.5		RCW-1045					RF Coupling "
C14	47		RCW-1052					Fixed Trimmer "
C15	5		RCW-2035					Conv. Plate Decoup. "
C16	5000		RCW-3014	1467-005	1D5D5	MW.5-25	1FM-25	Fixed Padder
C17	12	500	UCU-1506					V. IF Coup. "
C18	100		RCW-1047	1468-0001	5W5T1	MO.5-31	1FM-31	Bias Filter "
C19	5000		RCW-3014	1467-005	1D5D5	MW.5-25	1FM-25	1st V. IF Screen Byp."
C20	5000		RCW-3014	1467-005	1D5D5	MW.5-25	1FM-25	1st V. IF Plate
C21	5000		RCW-3014	1467-005	1D5D5	MW.5-25	1FM-25	Decoup. "
C22	100		RCW-1047	1468-0001	5W5T1	MO.5-31	1FM-31	Video IF Coupling "
C23	2.5		RCW-3017					Sound IF Coupling "
C24	5000		RCW-3014	1467-005	1D5D5	MW.5-25	1FM-25	Bias Filter "
C25	5000		RCW-3014	1467-005	1D5D5	MW.5-25	1FM-25	RF Bypass "
C26	5000		RCW-3014	1467-005	1D5D5	MW.5-25	1FM-25	2nd V. IF Screen Byp."
C27	5000		RCW-3014	1467-005	1D5D5	MW.5-25	1FM-25	2nd V. IF Plate
								Decoup. "
C28	100		RCW-1047	1468-0001	5W5T1	MO.5-31	1FM-31	Video IF Coupling "
C29	5000		RCW-3014	1467-005	1D5D5	MW.5-25	1FM-25	Bias Filter "
C30	5000		RCW-3014	1467-005	1D5D5	MW.5-25	1FM-25	3rd V. IF Screen Byp."
C31	5000		RCW-3014	1467-005	1D5D5	MW.5-25	1FM-25	3rd V. IF Plate
								Decoup. "
C32	6		RCW-1002					IF Coupling "

RESISTORS (CONT.)

R15	2700Ω	½	URD-1059	BTS-2700 ±5%	Red-Vi.-Red	1st Video IF Grid	±5%
R16	47Ω	½	URD-1017		Yl.-Vi.-Blk.	1st Video IF Cathode	±5%
R17	24KΩ	½	URD-1082	BTS-24K ±5%	Red-Yl.-Or.	1st Video Screen	±5%
R18	1000Ω	½	URD-049	BTS-1000	Br.-Blk.-Red	1st Video IF Plate Decoup.	±20%
R19	100KΩ	½	URD-097	BTS-100K	Br.-Blk.-Yl.	Bias Network	±20%
R20	1600Ω	½	URD-1054	BTS-1600 ±5%	Br.-Blue-Red	2nd Video IF Grid	±5%
R21	47Ω	½	URD-1017		Yl.-Vi.-Blk.	2nd Video IF Cathode	±5%
R22	24KΩ	½	URD-1082	BTS-24K ±5%	Red-Yl.-Or.	2nd Video IF Screen	±5%
R23	1000Ω	½	URD-049	BTS-1000	Br.-Blk.-Red	2nd Video IF Plate Decoup.	±20%
R24	2700Ω	½	URD-1059	BTS-2700 ±5%	Red-Vi.-Red	3rd Video IF Grid	±5%
R25	24KΩ	½	URD-1082	BTS-24K ±5%	Red-Yl.-Or.	3rd Video IF Screen	±5%
R26	1000Ω	½	URD-049	BTS-1000	Br.-Blk.-Red	3rd Video IF Plate Decoup.	±20%
R27	43KΩ	½	URD-1088	BTS-43K ±5%	Yl.-Or.-Or.	" " " " "	±5%
R28	5100Ω	½	URD-1066	BTS-5100 ±5%	Grn.-Br.-Red	Diode Load	±5%
R29	1 Meg.	½	URD-121	BTS-1 Meg.	Br.-Blk.-Grn.	Video Amp. Grid	±20%
R30	5100Ω	1	URE-1066	BTA-5100 ±5%	Grn.-Br.-Blk.	Video Amp. Plate	±5%
R31	10KΩ	2	URF-1073	BT-2-10K ±5%	Br.-Blk.-Or.	" " "	±5%
R32	11KΩ	2	URF-1074	BT-2-11K ±5%	Br.-Br.-Or.	" " "	±5%
R33	5600Ω	½	URD-1067	BTS-5600 ±5%	Grn.-Blue-Red	Bleeder	±5%
R34	1 Meg.	½	URD-121	BTS-1 Meg.	Br.-Blk.-Grn.	Video Output Grid	±20%
R35	120Ω	½	URD-1027		Br.-Red-Br.	Video Output Cathode	±5%
R36	3300Ω	2	URF-1061	BT-2-3300 ±5%	Or.-Or.-Red	Video Output Plate	±5%
R37	1000Ω	½	URD-1049	BTS-1000 ±5%	Br.-Blk.-Red	" " "	±5%
R38	270KΩ	½	URD-107	BTS-270K	Red-Vi.-Yl.	Picture Tube Cathode	
R39	20KΩ	2	URF-1080	BT-2-20K	Red-Blk.-Or.	Bias Network	
R40	4700Ω	½	URD-1065	BTS-4700	Yl.-Vi.-Red	" "	
R41	120Ω	½	URD-1027		Br.-Red-Br.	1st Sound IF Amp. Cathode	±5%
R42	56KΩ	½	URD-091	BTS-56K	Grn.-Blue-Or.	1st Sound IF Amp. Screen	
R43	22KΩ	1	URE-1081	BTA-22K ±5%	Red-Red-Or.	1st Sound IF Amp. Plate	±5%
R44	120Ω	½	URD-1027		Br.-Red-Br.	2nd Sound IF Amp. Cathode	±5%
R45	150KΩ	½	URD-101	BTS-150K	Br.-Grn.-Yl.	2nd Sound IF Amp. Screen	±20%
R46	22KΩ	1	URE-1081	BTA-22K ±5%	Red-Red-Or.	2nd Sound IF Amp. Plate	±5%
R47	220KΩ	½	URD-105	BTS-220K	Red-Red-Yl.	Limiter Screen	
R48	1000Ω	½	URD-049	BTS-1000	Br.-Blk.-Red	Limiter Decoupling	±20%
R49	68KΩ	½	URD-093	BTS-68K	Blue-Gray-Or.	De-emphasis	±20%
R50	68KΩ	½	URD-093	BTS-68K	Blue-Gray-Or.	"	±20%
R51	82KΩ	½	URD-095	BTS-82K	Gray-Red-Or.	Tone Compensation	
R52	1000Ω	½	URD-049	BTS-1000	Br.-Blk.-Red	Audio Amp. Grid	±20%
R53	10 Meg.	½	URD-145	BTS-10 Meg.	Br.-Blk.-Blue	" " "	±20%
R54	220KΩ	½	URD-105	BTS-220K	Red-Red-Yl.	Audio Amp. Plate	
R55	470KΩ	½	URD-113	BTS-470K	Yl.-Vi.-Yl.	Audio Output Grid	±20%
R56	750Ω	1	URE-1046	BTA-750 ±5%	Vi.-Grn.-Br.	Audio Output Cathode	±5%
R57	2.2 Meg.	½	URD-129	BTS-2.2 Meg.	Red-Red-Grn.	Sync. Amp. Grid	±20%
R58	1000Ω	½	URD-049	BTS-1000	Br.-Blk.-Red	Sync. Amp. Cathode	±20%
R59	15KΩ	1	URE-077	BTA-15K	Br.-Grn.-Or.	Sync. Amp. Plate	
R60	3.9 Meg.	½	URD-135	BTS-3.9 Meg.	Or.-Wh.-Grn.	Sync. Clipper Grid	
R61	6800Ω	½	URD-069	BTS-6800	Blue-Gray-Red	Sync. Clipper Cathode	
R62	1600Ω	½	URD-1054	BTS-1600 ±5%	Br.-Blue-Red	Sync. Clipper Plate	±5%
R63	8200Ω	½	URD-071	BTS-8200	Gray-Red-Red	Integrator	
R64	8200Ω	½	URD-071	BTS-8200	Gray-Red-Red	"	
R65	75KΩ	½	URD-1094	BTS-75K ±5%	Vi.-Grn.-Or.	Vert. Multivibrator Grid	±5%
R66	220KΩ	½	URD-1105	BTS-220K ±5%	Red-Red-Yl.	Vert. Multivibrator Plate	±5%
R67	82KΩ	½	URD-1095	BTS-82K	Gray-Red-Or.	Vert. Multivibrator Grid	±20%
R68	24KΩ	½	URD-1082	BTS-24K ±5%	Red-Yl.-Or.	" " " -Note	±5%
R69	2.2 Meg.	½	URD-1129	BTS-2.2 Meg. ±5%	Red-Red-Grn.	Vert. Multivibrator Plate	±5%
R70	27KΩ	1	URE-083	BTA-27K	Red-Vi.-Or.	Voltage Dropping	
R71	470Ω	½	URD-1041	BTS-470	Yl.-Vi.-Br.	Vert. Output Cathode	±20%
R72	100KΩ	½	URD-097	BTS-100K	Br.-Blk.-Yl.	Vert. Output Plate	±20%
R73	1500Ω	½	URD-053	BTS-1500	Br.-Grn.-Red	Vert. Defl. Coil Shunt	
R74	1 Meg.	½	URD-1121	BTS-1 Meg.	Br.-Blk.-Grn.	AFC Tube Grid	±20%
R75	3.3 Meg.	1	URE-133	BTA-3.3 Meg.	Or.-Or.-Grn.	Voltage Divider	±20%
R76	18KΩ	½		BTS-18K	Br.-Gray-Or.	AFC Filter	
R77	180KΩ	½	URD-1103	BTS-180K	Br.-Gray-Yl.	AFC Tube Cathode	
R78	82KΩ	½	URD-1095	BTS-82K	Gray-Red-Or.	Voltage Divider Network	
R79	33KΩ	1	URE-085	BTA-33K	Or.-Or.-Or.	" " "	±20%
R80	47KΩ	½	URD-089	BTS-47K	Yl.-Vi.-Or.	" " "	
R81	24KΩ	½	URD-1082	BTS-24K ±5%	Red-Yl.-Or.	Bleeder	±5%
R82	100KΩ	1	URE-097	BTA-100K	Br.-Blk.-Yl.	AFC Tube Plate	±20%
R83	82KΩ	2	URF-1095	BT-2-82K	Gray-Red-Or.	Horiz. Block. Osc. Plate	±20%
R84	150KΩ	½	URD-101	BTS-150K	Br.-Grn.-Yl.	AFC Network	
R85	82KΩ	½	URD-1095	BTS-82K	Gray-Red-Or.	Bias Network	
R86	56KΩ	½	URD-091	BTS-56K	Grn.-Blue-Or.	" " "	
R87	1 Meg.	½	URD-121	BTS-1 Meg.	Br.-Blk.-Grn.	Horiz. Output Grid	±20%
R88	330Ω	½	URD-037		Or.-Or.-Br.	Grid Current Limiting	±20%
R89	82Ω	2	URF-1023		Gray-Red-Blk.	Horiz. Output Cathode	
R90	33Ω	1	URE-013		Or.-Or.-Blk.	Horiz. Output Plate Sup.	±20%
R91	470KΩ	½	URD-113	BTS-470K	Yl.-Vi.-Yl.	Current Limiting	±20%
R92	27KΩ	2	URF-083	BT-2-27K	Red-Vi.-Or.	Horiz. Output Screen	
R93	27KΩ	2	URF-083	BT-2-27K	Red-Vi.-Or.	" " "	
R94	470KΩ	½	URD-113	BTS-470K	Yl.-Vi.-Yl.	Hi.Volt. Filter	±20%

ALIGNMENT INSTRUCTIONS

ALIGNMENT INSTRUCTIONS—READ CAREFULLY BEFORE ATTEMPTING ALIGNMENT

SOUND IF ALIGNMENT

High voltage may be disabled during alignment by removing V14.
Keep signal generator output low enough to prevent overloading the amplifiers.
Contrast control should be set at approximately half rotation for all IF adjustments.
The signal generator lead should be terminated with a resistor equal to the impedance of the generator then connected with as short a lead as possible through a 500 MMF capacitor. Connect ground lead to chassis at the closest possible point.
When aligning the Video IF, the tube preceding the one to which signal is applied should be removed. If this is not done, the previous coil will act as a trap and cause considerable change in the response pattern.
If the response curve is peaked at the low frequency end and can not be connected by the slug, try changing the 6AU6 into which the signal is fed. Abnormally high plate capacity can cause this difficulty.
Use insulated alignment tool for adjustments.

	DUMMY ANTENNA	SIGNAL GENERATOR COUPLING	SIGNAL GENERATOR FREQUENCY	MARKER GENERATOR FREQUENCY	CHANNEL	CONNECT SCOPE	ADJUST	REMARKS
1	500 MMF.	Pin #1 (grid) of 6AU6 (V9).	21.8MC 1MC sweep	21.8MC	4	High side to Point Ⓐ through 100KΩ resistor. Low side to chassis.	A1	Adjust for maximum amplitude with marker at center of peak. See Fig. 1.
2	500 MMF.	Pin #1 (grid) of 6AU6 (V8).	"	"	"	"	A2	" (See Note Below)
3	500 MMF.	"	"	21.8MC (400 ∿ Mod.)	"	High side to Point Ⓑ through 10KΩ resistor. Low side to chassis.	A3	Adjust for symmetrical S curve. At proper frequency the modulation at the edges of the pattern will disappear. See Fig. 2.
4	500 MMF.	"	"	"	"	"	A4	Adjust for maximum amplitude and symmetry of S curve. Repeat Steps 3 and 4 for best results.

NOTE: On later production L21 has been changed to a transformer. Adjust both top and bottom slugs for maximum amplitude and symmetry.

VIDEO IF ALIGNMENT

	DUMMY ANTENNA	SIGNAL GENERATOR COUPLING	SIGNAL GENERATOR FREQUENCY	MARKER GENERATOR FREQUENCY	CHANNEL	CONNECT SCOPE	ADJUST	REMARKS
5	500 MMF.	Pin #1 (grid) of 6AU6 (V5).	25MC 10MC sweep	22.9MC 26.3MC	4	High side to Point Ⓒ through 10KΩ resistor. Low side to chassis.	A5,A6	Adjust for maximum amplitude with pattern as shown in Fig. 3. Remove V4 during this adjustment.
6	500 MMF.	Pin #1 (grid) of 6AU6 (V4).	"	22.9MC 25.55MC 26.3MC	"	"	A7	Adjust for maximum amplitude with pattern as shown in Fig. 4. Remove V3 during this adjustment.
7	500 MMF.	Pin #1 (grid) of 6AU6 (V3).	Not used	21.8MC 400 ∿ (Mod.)	"	"	A8	Adjust for minimum amplitude.
8	500 MMF.	"	25MC 10MC sweep	22.9MC 23.4MC 25.55MC 26.3MC	"	"	A9	Remove V2 during this step. Adjust for maximum amplitude with pattern as shown in Fig. 5.
9	500 MMF.	Pin #7 (grid) of 12AT7.	"	"	"	"	A10	Turn A11 to minimum. Adjust for maximum amplitude with pattern as shown in Fig. 5.
10	500 MMF	"	"	"	"	"	A11	Adjust for 26.3MC at half amplitude as shown in Fig. 6.

RF ALIGNMENT

Terminate signal generator lead with a carbon resistor equal to generator impedance, then connect to antenna terminals through two equal resistances to make total equal approximately 300 ohms.

DO NOT ATTEMPT TO ALIGN THE RF SECTION UNLESS IT IS DEFINITELY KNOWN TO BE NECESSARY. Usually alignment will not be necessary unless a coil has been damaged or replaced. Since separate coils are used for each switch position it should be necessary to re-align only the deflective channel. Adjustment of A12 and A13 may be necessary when tubes are replaced in the RF Tuner.

Adjustments are made by changing the inductance of the individual coils. Coupling is fixed except for channels #2 and #3. Coupling on channel #2 may be varied by sliding the copper rings on the coil form. Coupling on channel #3 may be adjusted if necessary by moving turns at the insides of the coils. Frequency adjustment is made in each case by expanding or compressing the coils. The upper three switch positions each cover two channels and must be sufficiently broad. The fine tuning control should be at center position during oscillator alignment.

	DUMMY ANTENNA	SIGNAL GENERATOR COUPLING	SIGNAL GENERATOR FREQUENCY	MARKER GENERATOR FREQUENCY	CHANNEL	CONNECT SCOPE	ADJUST	REMARKS
11	Resistive (See above)	Antenna terminals.	85MC 15MC sweep	83.25MC 87.75MC	6	High side to Point Ⓓ. Low side to chassis. Disconnect C16.	A12,A13	Adjust for maximum amplitude and flat response. See Fig. 7.
12	"	"	79MC 15MC sweep	77.25MC 81.75MC	5	"	A14	"
13	"	"	69MC 15MC sweep	67.25MC 71.75MC	4	"	A15	"
14	"	"	63MC 15MC sweep	61.25MC 65.75MC	3	"	A16	"
15	"	"	57MC 15MC sweep	55.25MC 59.75MC	2	"	A17	Adjust for maximum. See Fig. 8.
16	"	"	177MC 15MC sweep	175.25MC 179.75MC	7	"	A18,A19	Adjust for maximum. See Fig. 7. Keep slugs approximately even.
17	"	"	186.5MC 25MC sweep	181.25MC 191.75MC	8-9	"	A20,A21	Adjust for maximum. See Fig. 9.
18	"	"	198.5MC 25MC sweep	193.25MC 203.75MC	10-11	"	A22,A23	"
19	"	"	210.5MC 25MC sweep	205.25MC 215.75MC	12-13	"	A24,A25	"

OSCILLATOR ALIGNMENT

	DUMMY ANTENNA	SIGNAL GENERATOR COUPLING	SIGNAL GENERATOR FREQUENCY	CHANNEL		ADJUST	REMARKS
20	Resistive (see above)	Antenna terminals	59.75MC (Modulated)	2		A26	Set volume control and tuning control at mid-position. Use sound output as indicator. Squeeze or spread turns to adjust.
21	"	"	65.75MC (Modulated)	3		A27	"
22	"	"	71.75MC (Modulated)	4		A28	"
23	"	"	81.75MC (Modulated)	5		A29	"
24	"	"	87.75MC (Modulated)	6		A30	"
25	"	"	179.75MC (Modulated)	7		A31	"
26	"	"	188.75MC (Modulated)	8-9		A32	"
27	"	"	200.75MC (Modulated)	10-11		A33	"
28	"	"	212.75 (Modulated)	12-13		A34	"

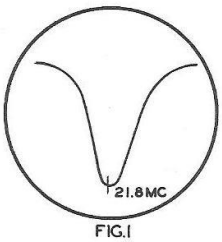

FIG.1

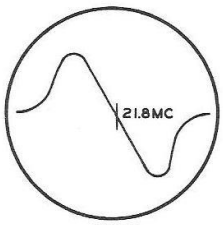

FIG.2

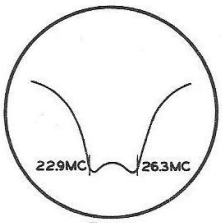

FIG.3

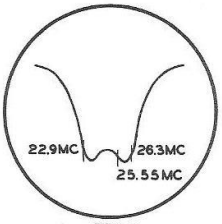

FIG.4

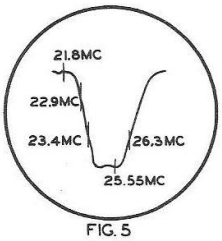

FIG. 5

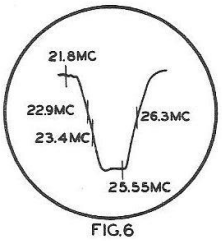

FIG.6

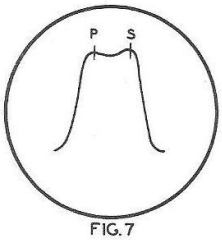

FIG.7

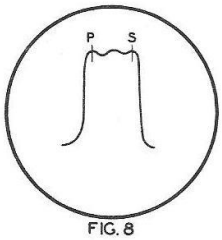

FIG. 8

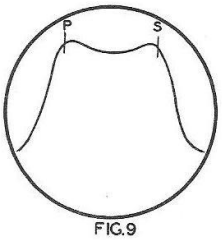

FIG.9

HORIZONTAL FREQUENCY ADJUSTMENT

The horizontal frequency control is a coarse adjustment used to set the front panel horizontal hold control to obtain synchronization at approximately the center of its range. The core (B1) of the blocking oscillator transformer sets the natural frequency of the system.

Connect a VTVM to the junction of the contrast control and resistor R85. Tune in a television signal and adjust the front panel horizontal hold control to the center of its range. Alternately adjust the horizontal frequency control and slug B1 until synchronization is obtained with 12 volts indicated by the VTVM. The voltage must be within one volt of 12 volts at the correct adjustment.

The front panel horizontal hold control should cause the picture to fall out of synchronization at each end of its rotation.

C33	.05	600	UCC-635	684-05	DT6S5	ST-6-05	TM-15	Video Coupling
C34	.047	600	RCN-014	684-05	DT6S5	ST-6-05	TM-15	" "
C35	390	500	UCU-1542	1468-0004	5W5T4	MO.5-34	1FM-34	Video Amp. Cath.
C36	.05	600	UCC-635	684-05	DT6S5	ST-6-05	TM-15	Sync. Coupling
C37	.1	600	UCC-640	684-.1	DT6P1	ST-6-1	TM-1	Picture Tube Cath.
C38	5000		RCW-3014	1467-005	1D5D5	MW.5-25	1FM-25	1st S. IF Cath. Byp.-Cer.
C39	5000		RCW-3014	1467-005	1D5D5	MW.5-25	1FM-25	1st S. IF Screen Byp. "
C40	100	500	UCU-1528	1468-0001	5W5T1	MO.5-31	1FM-31	Sound IF Coupling "
C41	5000		RCW-3014	1467-005	1D5D5	MW.5-25	1FM-25	RF Bypass "
C42	5000		RCW-3014	1467-005	1D5D5	MW.5-25	1FM-25	2nd S. IF Cath. Byp. "
C43	5000		RCW-3014	1467-005	1D5D5	MW.5-25	1FM-25	2nd S. IF Screen Byp. "
C44	100	500	UCU-1528	1468-0001	5W5T1	MO.5-31	1FM-31	Sound IF Coupling
C45	47		RCW-1052	1468-00005	5W5Q5	MO.5-45	1FM-45	Lim. Grid Filter "
C46	5000		RCW-3014	1467-005	1D5D5	MW.5-25	1FM-25	Lim. Screen Byp. "
C47	5000		RCW-3014	1467-005	1D5D5	MW.5-25	1FM-25	Lim. Plate Decoup. "
C48	150	500	UCU-1532	1468-00015	5W5T15		1FM-315	De-emphasis
C49	.01	600	UCC-630	684-01	DT6S1	ST-6-01	TM-11	Audio Coupling
C50	.01	600	UCC-630	684-01	DT6S1	ST-6-01	TM-11	Tone Comp.
C51	.02	600	UCC-631	684-02	DT6S2	ST-6-02	TM-12	Audio Coupling
C52	390	500	UCU-1542	1468-0004	5W5T4	MO.5-34	1FM-34	Audio Plate Bypass
C53	.01	600	UCC-630	684-01	DT6S1	ST-6-01	TM-11	Audio Coupling
C54	.005	600	UCC-625	684-005	DT6D5	ST-6-005	TM-25	Output Plate Bypass
C55	.05	600	UCC-635	684-05	DT6S5	ST-6-05	TM-15	Contr. Cont. Bypass
C56	100	500	UCU-1528	1468-0001	5W5T1	MO.5-31	1FM-31	Sync. Coupling
C57	390	500	UCU-1542	1468-0004	5W5T4	MO.5-34	1FM-34	Clip Cath.
C58	120	500	UCU-1530					Hor. Sync. Coup.
C59	120	500	UCU-1530					Voltage Divider
C60	.002	600	UCC-621	684-002	DT6D2	ST-6-002	TM-22	Sync. Coupling
C61	.2	600	UCC-014	684-.2	DT6P2	ST-6-2	TC-2	AFC Filter
C62	.002	600	UCC-621	684-002	DT6D2	ST-6-002	TM-22	" "
C63	.05	600	UCC-635	684-05	DT6S5	ST-6-05	TM-15	AFC Plate Byp.
C64	180	500	UCU-2534					Hor. Osc. Grid
C65	2200		UCU-2560					Hor. Discharge
C66	390	500	UCU-1542	1468-0004	5W5T4	MO.5-34	1FM-34	Hor. Sync. Coup.
C67	.5	200	RCC-016	484-.5	DT4P5	ST-2-5	TC-5	Hor. Out. Cath.
C68	.1	600	UCC-640	684-.1	DT6P1	ST-6-1	TM-1	Hor. Out. Screen
C69	.05	600	UCC-635	684-05	DT6S5	ST-6-05	TM-15	Damper Filter
C70	.1	600	UCC-640	684-.1	DT6P1	ST-6-1	TM-1	" " "
C71	.5	200	RCC-016	484-.5	DT4P5	ST-2-5	TC-5	Hor. Coupling
C72	4	800	RCN-020					AFC Coupling
C73	500	2000	RCN-011					H. V. Filter
C74	.01	600	UCC-630	684-01	DT6S1	ST-6-01	TM-11	Acc. Anode Byp.
C75	.05	600	UCC-635	684-05	DT6S5	ST-6-05	TM-15	Integrating Net.
C76	.01	600	UCC-630	684-01	DT6S1	ST-6-01	TM-11	" "
C77	.01	600	UCC-630	684-01	DT6S1	ST-6-01	TM-11	" "
C78	.001	600	UCC-620	684-001	DT6D1	ST-6-001	TM-21	Vert. Sync. Coup.
C79	.002	600	UCC-621	684-002	DT6D2	ST-6-002	TM-22	Vert. M.V. Feedback
C80A	.062	600	RCC-095					" " "
B	.05	600	UCC-635	684-05	DT6S5	ST-6-05	TM-15	" " " *
C81	.001	600	UCC-620	684-001	DT6D1	ST-6-001	TM-21	Vert. M.V. Grid
C82	.1	600	UCC-640	684-.1	DT6P1	ST-6-1	TM-1	Vert. Discharge
C83	1500		RCW-026	1467-0015	1W5D15		1FM-215	Fil. Bypass -Cer.
C84	5000		RCW-3014	1467-005	1D5D5	MW.5-25	1FM-25	" " "
C85	.0022	1000	RCN-019					Pulse Coupling

*May be used in some models.

CONTROLS

ITEM No.	RATING		REPLACEMENT DATA				NOTES
	RESISTANCE	WATTS	GENERAL ELECTRIC PART No.	CLAROSTAT PART No.	IRC PART No.		
R1	2 Meg.	½	RRC-091				Volume & On-Off Switch-Tap @ 500KΩ
R2	1000Ω	4	RRC-088	10-1000			Focus
R3A	50KΩ	½	RRC-090				Vertical Hold } Dual Control
B	50KΩ	½					Horizontal Hold } Dual Control
R4A	500KΩ	½	RRC-089				Contrast } Dual Control
B	7500Ω	½					Brightness } Dual Control
R5A	100KΩ	½	RRC-087	AM-49-8	D11-128		Vertical Size
B	Shaft			KSS-3	E		Attach to R5A per instructions
R6	1000Ω	2	RRC-086	43-1000	W-1000		Vertical Linearity

RESISTORS

ITEM No.	RATING		REPLACEMENT DATA		IDENTIFICATION CODES All Resistors ±10% Tolerance Unless Otherwise Stated		
	RESISTANCE	WATTS	GENERAL ELECTRIC PART No.	IRC PART No.			
R7	200Ω	½	URD-1032		Red-Blk.-Br.	RF Amp. Cathode	±5%
R8	6200Ω	1	URE-1068	BTA-6200 ±5%	Blue-Red-Red	RF Amp. Plate	±5%
R9	5600Ω	1	URE-1067	BTA-5600 ±5%	Grn.-Blue-Red	RF Amp. Plate	±5%
R10	3000Ω	1	URE-1060	BTA-3000 ±5%	Or.-Blk.-Red	Osc. Plate	±5%
R11	22KΩ	½	URD-1081	BTS-22K ±5%	Red-Red-Or.	Osc. Grid	±5%
R12	220KΩ	½	URD-1105	BTS-220K	Red-Red-Yl.	Mixer Grid	±
R13	24KΩ	½	URD-1082	BTS-24K ±5%	Red-Yl.-Or.	Mixer Plate	±5%
R14	27KΩ	1	URE-083	BTA-27K	Red-Vi.-Or.	Mixer Plate	
R95	3300Ω	2	URF-061	BT-2-3300	Or.-Or.-Red	Horiz. Size Coil Shunt	±20%
R96	4700Ω	½	URD-065	BTS-4700	Yl.-Vi.-Red	Horiz. Linearity Coil Shunt	±20%
R97	560KΩ	½	URD-115	BTS-560K	Grn.-Blue-Yl.	Differentiator	
R98	2200Ω	2	URF-1057	BT-2-2200	Red-Red-Red	Filter	±20%
R99	.65Ω	4	RRW-029			Filament Dropping	
R100	560Ω	7	RRW-028			Filter	
R101	1Ω	½	RRW-034			Filament Dropping	
R102	56KΩ	½	URD-091	BTS-56K	Grn.-Blue-Or.	Limiter Grid	
R103	100KΩ	½	URD-097	BTS-100K	Br.-Blk.-Yl.	Acc. Anode Filter	±20%
R104	1 Meg.	½	URD-121	BTS-1 Meg.	Br.-Blk.-Grn.	Isolation	

Note-R68 is either shorted out or left in the circuit when centering of vertical hold control R3A is checked at factory.

TRANSFORMER (POWER)

ITEM No.	RATING				REPLACEMENT DATA			
	PRI.	SEC. 1	SEC. 2	SEC. 3	GENERAL ELECT. PART No.	STANCOR PART No.	THORDARSON PART No.	MERIT PART No.
T1	2 Amp. @ 117VAC	130 MA @ 630VAC & 115 MA @ 590VAC	3 Amp. @ 5VAC SEC. 4 2 Amp. @ 6.3VAC	2 Amp. @ 6.3VAC SEC. 5 3.6 Amp. @ 12VAC	RTP-062			

TRANSFORMER (SWEEP CIRCUITS)

ITEM No.	RATING		REPLACEMENT DATA					NOTES
	DC RESISTANCE		GENERAL ELECTRIC PART No.	STANCOR PART No.	THORDARSON PART No.	MERIT PART No.		
	PRI.	SEC.						
T2	73Ω	11Ω	RTO-053	A-8115*	TV-24S86*	A-3035*		*Drill new mtg. holes
T3	120Ω tapped @ 35Ω		RTM-003					Hor. Block. Osc. Trans.
T4	38Ω	SEC.#1 230Ω	RTO-054					Hor. Output Trans.
	SEC.#2 11Ω	SEC.#3 0Ω						
T5A	28Ω		RLD-006					Vert. Deflection Yoke
B	15Ω							Hor. Deflection Yoke
T6	1000Ω		RLF-013					Focus Coil

TRANSFORMER (AUDIO OUTPUT)

ITEM No.	RATING				REPLACEMENT DATA				INSTALLATION NOTES
	IMPEDANCE		DC RES.		GENERAL ELECTRIC PART No.	STANCOR PART No.	THORDAR'N PART No.	MERIT PART No.	
	PRI.	SEC.	PRI.	SEC.					
T7	7400Ω	3.2Ω	580Ω	.6Ω	RTO-052	A-3878	T22S47	A-2902	

SPEAKER

ITEM No.	RATING		REPLACEMENT DATA			NOTES
	FIELD	V. C. IMP.	GENERAL ELECT. PART No.	JENSEN PART No.	QUAM PART No.	
SP1	PM	3.2Ω	UOP-577	ST-105	52A1	
	CONE DIA.	V. C. DIA.				
SP2	5"	9/16"				

FILTER CHOKE

ITEM No.	RATINGS			REPLACEMENT DATA				INSTALLATION NOTES
	TOTAL DIRECT CURRENT	D. C. RESISTANCE	INDUCTANCE (0 CURRENT 1000 ∿)	GENERAL ELECTRIC PART No.	STANCOR PART No.	THORDARSON PART No.	MERIT PART No.	
L1	130MA	160Ω	7 Henries	RLI-059	C-2309			
L2	115MA	160Ω	7 Henries	RLI-060	C-2309			

PARTS LIST AND DESCRIPTION CONTINUED ON PAGE 11

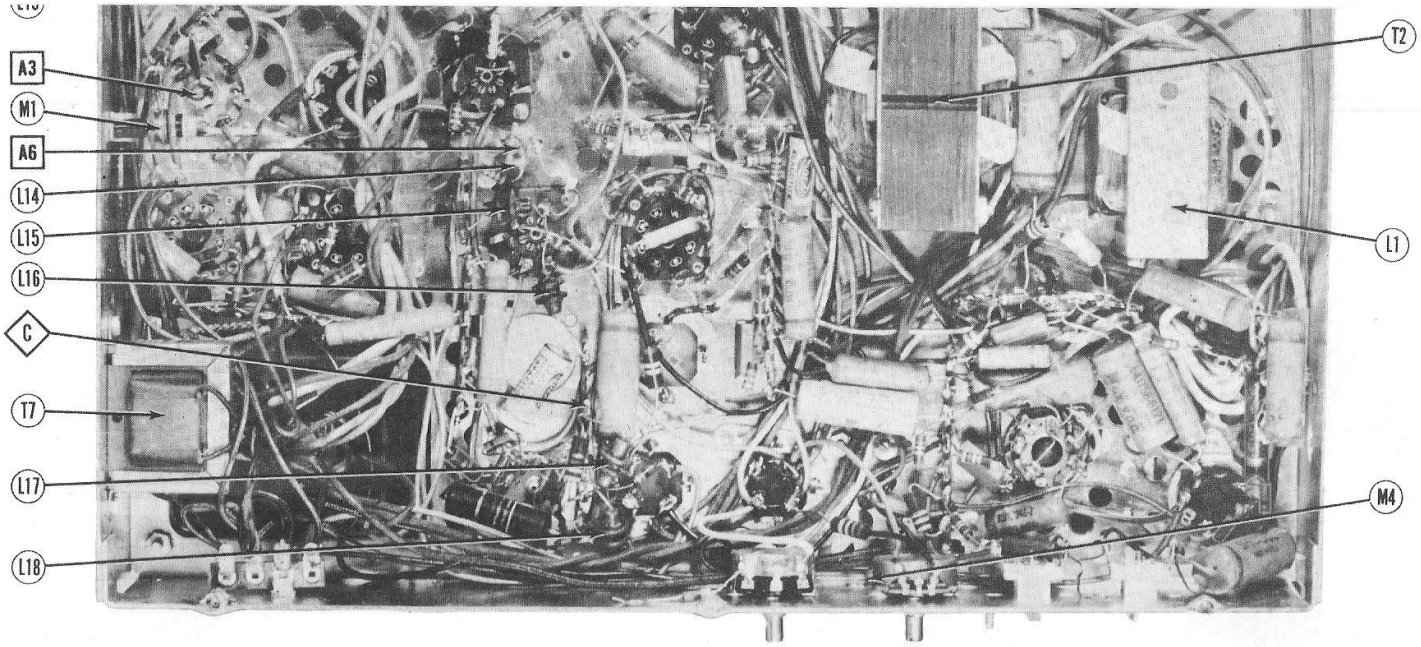

CHASSIS-BOTTOM VIEW-TRANS, INDUCTOR AND ALIGNMENT IDENTIFICATION

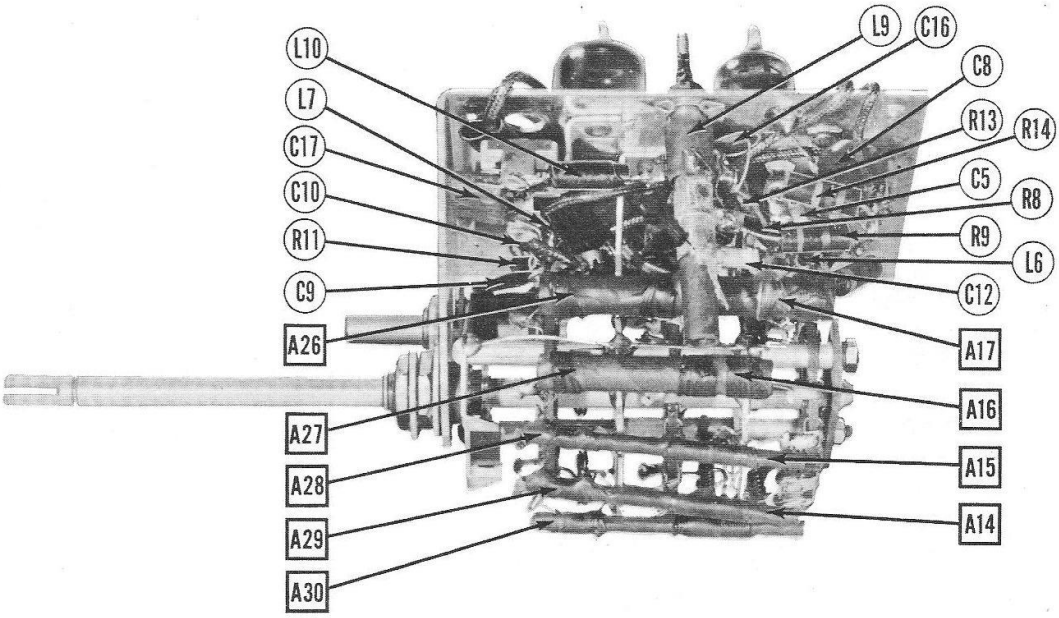

RF TUNER - RIGHT SIDE

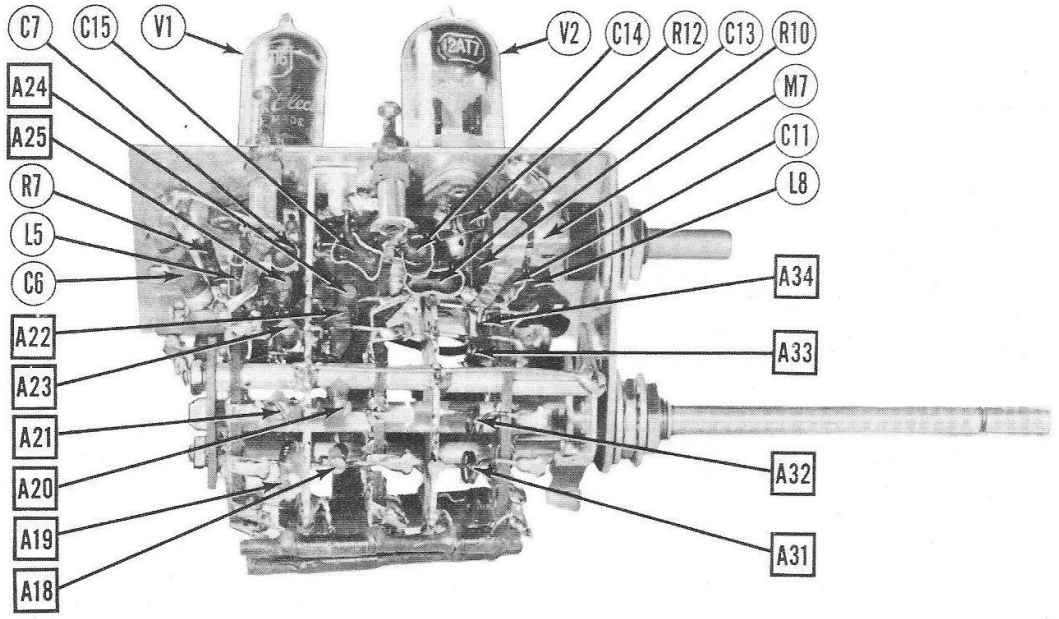

RF TUNER - LEFT SIDE

PARTS LIST AND DESCRIPTIONS (Continued)

COILS (RF-IF)

ITEM No.	USE	DC RES.. PRI.	DC RES.. SEC.	REPLACEMENT DATA: GENERAL ELECTRIC PART No.	REPLACEMENT DATA: MEISSNER PART No.	NOTES
L3	Ant. Trans.	0Ω	0Ω	RLA-031		
L4	Compensating	0Ω		RLI-006		
L5	RF Cathode	0Ω		RLI-003		Low Band
L6	" "	0Ω		RLI-006		High Band Only
L7	Osc. Cath.	1.5Ω		RLI-019		
L8	Osc. Fil.	0Ω		RLI-005		
L9	1st IF	.5Ω	.2Ω	RTL-081		
L10	Video Trap	.2Ω		RLI-005		
L11	2nd IF	.2Ω	.2Ω	RTL-082		
L12	Sound Trap	.5Ω		RLI-061		
L13	3rd Video IF	.2Ω	.2Ω	RTL-083		
L14	4th Video IF	.2Ω	.2Ω	RTL-089		
L15	Shunt Peak.	7.5Ω		RLI-038		
L16	Series Peaking	7.5Ω		RLI-038		
L17	Shunt Peak.	7.5Ω		RLI-038		
L18	Series Peaking	7.5Ω		RLI-038		
L19	Hor. Size	2.4Ω	125Ω	RLD-004		
L20	Hor. Linearity	33Ω		RLD-005		
L21A	3rd Sound IF	.1Ω		RTL-085		
B	3rd Sound IF			RTL-090		Late Production (See inset on schematic)
L22	4th Sound IF	.1Ω		RTL-085		
L23	Discriminator	.1Ω	.1Ω	RTD-007		

SELENIUM RECTIFIER

ITEM No.	RATING: CURRENT	REPLACEMENT DATA: GENERAL ELECT. PART No.			NOTES
M1	150MA	RER-003			

MISCELLANEOUS

ITEM No.	PART NAME	GENERAL ELECTRIC PART No.	NOTES
M2	RF Tuner Complete	RJX-023	
M3	Centering Assembly	RAX-024	
M4	AC Receptacle	RJJ-007	
M5	Power Cord and Plug	RWL-019	
M6	Picture Tube Socket	RJS-119	
M7	Fine Tuning	RCY-046	Variable Capacitor 1.25 MMF
A8	Sound Trap Trimmer	RCY-047	Mica Trimmer 1.5-15 MMF
A11	Video Carrier Set	RCY-047	" " " "
A12	RF Trimmer	RCY-048	" " .4-2.4 MMF
A13	Mixer Trimmer	RCY-048	" " .4-2.4 MMF
B1	Core	RE1-015	Horizontal Osc. Adjustment
	"	RE1-016	IF Adjustments
	"	RE1-017	Horizontal Linearity Adjustment
	"	RE1-018	Horizontal Size Control
	"	RE1-019	Discriminator Adjustment
	"	RE1-026	L14 Primary
	"	RE1-014	High Band RF Adjustments
	Horizontal Frequency Control	RCY-045	Trimmer - 25-150 MMF.
	Horizontal Drive	RCY-045	Trimmer - 25-150 MMF.
	Safety Glass	RDW-010	
	Knob	RDK-152	Vertical Hold and Contrast
	"	RDK-153	Horizontal Hold and Brightness
	"	RDK-154	Focus and Tuning
	"	RDK-155	Volume and Channel Selector
	Cabinet	RAV-059	
	Cabinet Back Cover	RAB-077	
	Sleeve	RHM-054	Fiber Centering Sleeve

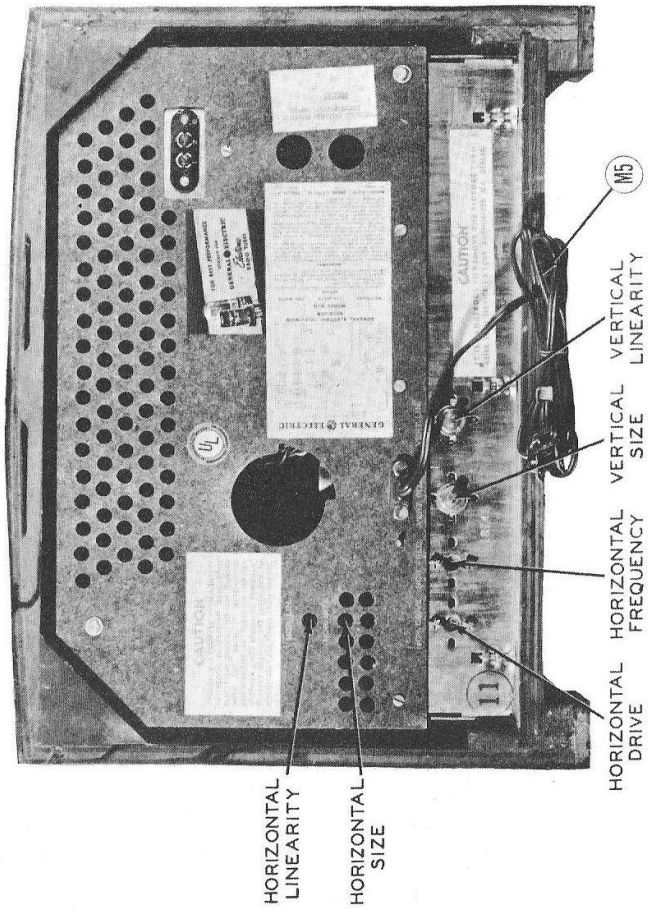

CABINET-REAR VIEW

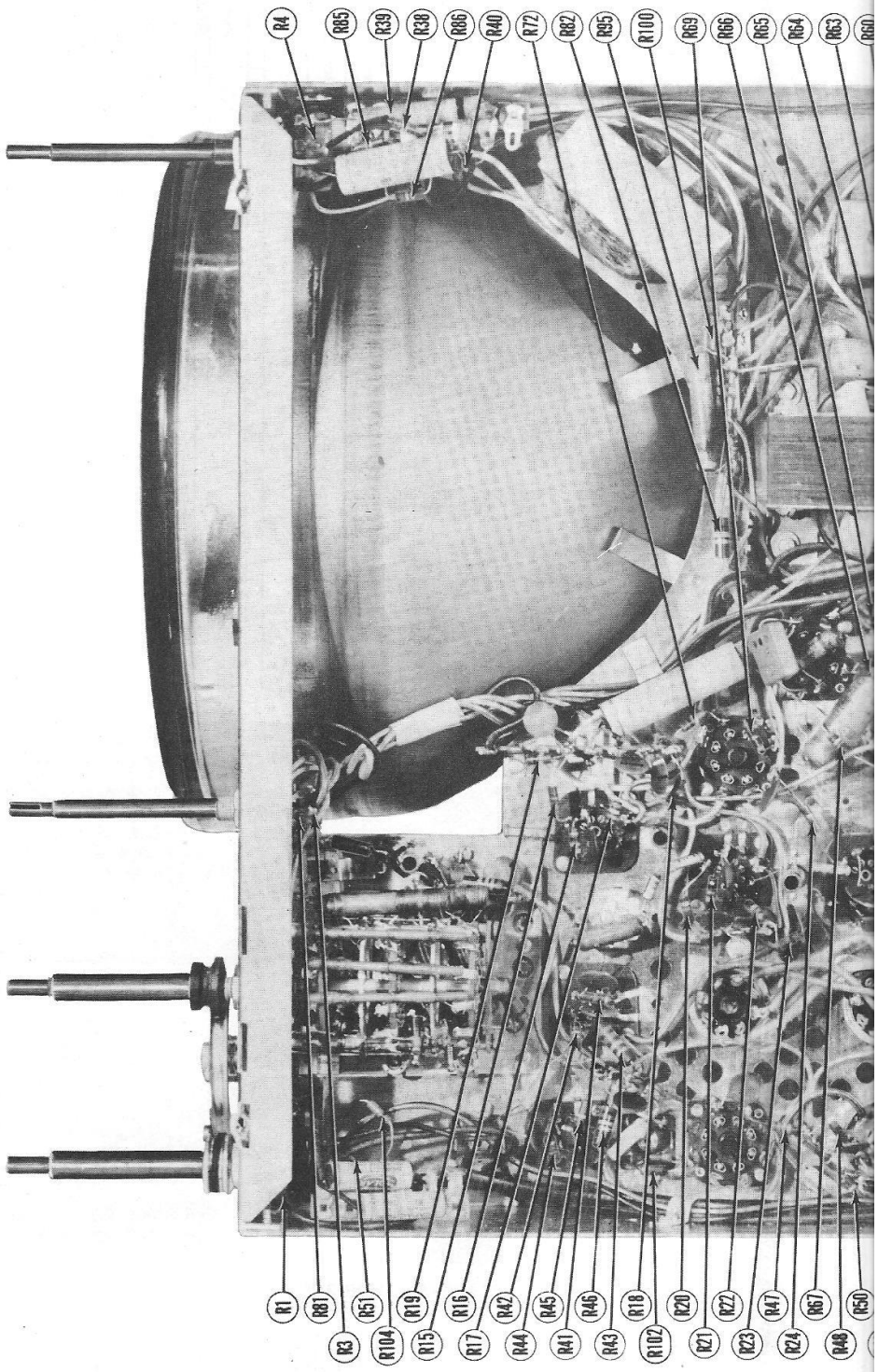
R4
R85
R39
R38
R86
R40
R72
R82
R95
R100
R69
R66
R65
R64
R63
R1
R81
R51
R19
R16
R42
R45
R46
R18
R20
R22
R47
R67
R50
R3
R104
R15
R17
R44
R41
R43
R102
R21
R23
R24
R48

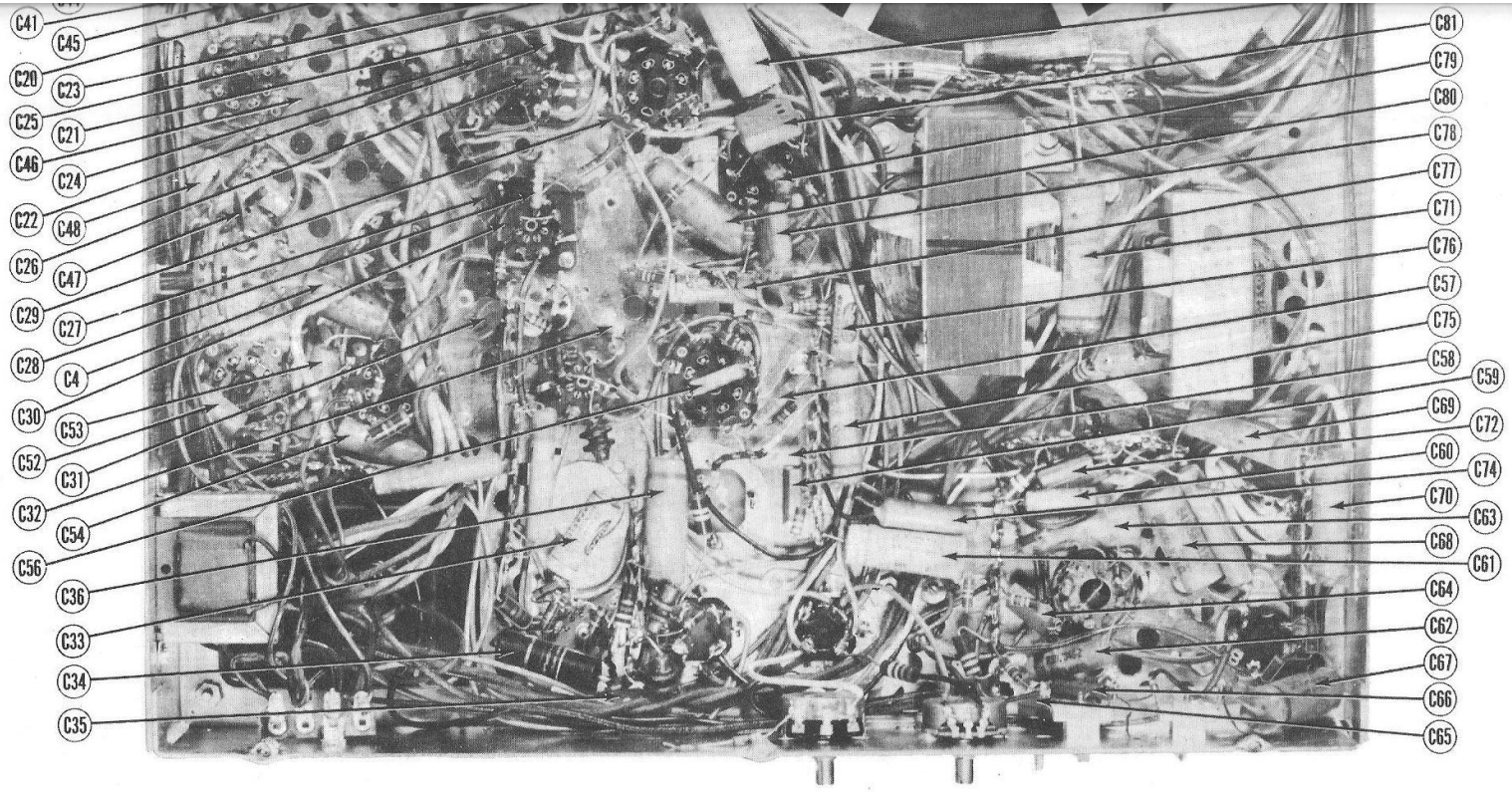

CHASSIS BOTTOM VIEW-CAPACITOR IDENTIFICATION

VOLTAGE AND RESISTANCE MEASUREMENTS

VOLTAGE READINGS

Item	Tube	Pin 1	Pin 2	Pin 3	Pin 4	Pin 5	Pin 6	Pin 7	Pin 8	Cap
V 1	6AU6	0V.	140VDC	0V.	6.3VAC	140VDC	140VDC	1.7VDC	-	-
V 2	12AT7	215VDC	-.5VDC	.05VDC.	6.2VDC	6.3VAC	150VDC	-5.2VDC	0V.	Pin #9 0V.
V 3	6AU6	-1.2VDC	0V.	0V.	6.3VAC	265VDC	165VDC	.7VDC	-	-
V 4	6AU6	-.3VDC	0V.	0V.	6.3VAC	265VDC	158VDC	.8VDC	-	-
V 5	6AU6	-.4VDC	0V.	0V.	6.3VAC	230VDC	120VDC	0V.	-	-
V 6	6AL5	0V.	-.4VDC	6.3VAC	0V.	0V.	0V.	-11VDC	-	-
V 7	12AU7	45VDC	-.6VDC	0V.	0V.	0V.	165VDC	0V.	2VDC	Pin #9 6.3VAC
V 8	6AU6	0V.	0V.	0V.	6.3VAC	117VDC	100VDC	1.0VDC	-	-
V 9	6AU6	0V.	0V.	0V.	6.3VAC	165VDC	55VDC	.6VDC	-	-
V 10	6SH7	0V.	0V.	0V.	-.4VDC	0V.	42VDC	6.3VAC	235VDC	-
V 11	6AQ7GT	0V.	.4VDC	.1VDC	-.6VDC	90VDC	0V.	6.3VAC	0V.	-
V 12	6K6GT	0V.	0V.	305VDC	110VDC	0V.	18VDC	6.3VAC	18VDC	-
V 13	6SN7GT	-1.2VDC	170VDC 250VDC	5.3VDC	0V.	160VDC	5.3VDC	0V.	6.3VAC	-
V 14	6SN7GT	-75VDC	200VDC	0V.	-45VDC	44VDC	-38VDC	0V.	6.3VAC	-
V 15	6BG6G	0V.	0V.	7.3VDC	-10VDC	-10VDC	0V.	6.3VAC	300VDC	#
V 16	5V4G	0V.	440VDC	0V.	350VDC	0V.	350VDC	0V.	440VDC	-
V 17	6SN7GT	-.4VDC	24VDC	0V.	-3.2VDC	3.1VDC 4.9VDC	0V.	0V.	6.3VAC	-
V 18	6V6GT	0V.	6.3VAC	270VDC	170VDC 250VDC	3.1VDC 4.9VDC	-.3VDC	0V.	13VDC 21VDC	-
V 19	1B3GT		D O	N O T	M E A S U R E.					
V 20	5U4G	0V.	380VDC	0V.	315VAC	0V.	315VAC	0V.	380VDC	-
V 21	5Y3GT	0V.	300VDC	0V.	295VAC	0V.	295VAC	0V.	300VDC	-
V 22	10FP4	300VDC	165VDC	Pin #10 435VDC	Pin #11 200VDC	Pin #12 300VDC				

#DO NOT MEASURE.

RESISTANCE READINGS

Item	Tube	Pin 1	Pin 2	Pin 3	Pin 4	Pin 5	Pin 6	Pin 7	Pin 8	Cap
V 1	6AU6	0Ω	12KΩ†	0Ω	.1Ω	12KΩ†	12KΩ†	200Ω	-	-
V 2	12AT7	3.5KΩ†	22KΩ	1Ω	.1Ω	.1Ω	30KΩ†	220KΩ	0Ω	Pin #9 0Ω
V 3	6AU6	60KΩ	0Ω	0Ω	.1Ω	13KΩ†	25KΩ†	47Ω	-	-
V 4	6AU6	160KΩ	0Ω	0Ω	.1Ω	13KΩ†	25KΩ†	47Ω	-	-
V 5	6AU6	60KΩ	0Ω	0Ω	.1Ω	15KΩ†	25KΩ†	0Ω	-	-
V 6	6AL5	0Ω	3.5 Meg.	.1Ω	0Ω	0Ω	0Ω	5KΩ	-	-
V 7	12AU7	20KΩ*	900KΩ	0Ω	0Ω	0Ω	48KΩ†	850KΩ	120Ω	Pin #9 .1Ω
V 8	6AU6	.1Ω	0Ω	0Ω	.1Ω	23KΩ†	60KΩ†	120Ω	-	-
V 9	6AU6	.1Ω	0Ω	0Ω	.1Ω	23KΩ†	150KΩ†	120Ω	-	-
V 10	6SH7	0Ω	0Ω	0Ω	60KΩ	0Ω	240KΩ†	.1Ω	17KΩ†	-
V 11	6AQ7GT	.2Ω	120KΩ	240KΩ	10 Meg.	230KΩ†	0Ω	.1Ω	0Ω	-
V 12	6K6GT	INF.	0Ω	3KΩ*	550Ω†	500KΩ	750Ω	.1Ω	750Ω	-
V 13	6SN7GT	3.5 Meg.	30KΩ* 110KΩ*	7KΩ	2.5 Meg.	14KΩ†	1000Ω	0Ω	.1Ω	-
V 14	6SN7GT	160KΩ	INF.	0Ω	850KΩ	50KΩ*	280KΩ	0Ω	.1Ω	-
V 15	6BG6G	INF.	0Ω	80Ω	1 Meg.	1 Meg.	INF.	.1Ω	INF.	INF.
V 16	5V4G	INF.	INF.	INF.	180Ω*	INF.	180Ω*	INF.	INF.	-
V 17	6SN7GT	80KΩ	220KΩ*	0Ω	80KΩ	2.2 Meg.*	0Ω	0Ω	.1Ω	-
V 18	6V6GT	INF.	.1Ω	900Ω†	30KΩ* 110KΩ*	2.2 Meg.*	50KΩ	0Ω	470Ω 1500Ω	-
V 19	1B3GT	INF.	INF.	INF.	INF.	INF.	INF.	INF.	INF.	INF.
V 20	5U4G	INF.	25KΩ	INF.	15Ω	INF.	16Ω	INF.	25KΩ	-
V 21	5Y3GT	INF.	35KΩ	INF.	13Ω	INF.	14Ω	INF.	35KΩ	-
V 22	10FP4	35KΩ	48KΩ†	Pin #10 INF.	Pin #11 28KΩ	Pin #12 35KΩ				

*MEASURED FROM PIN 2 OF V20. †MEASURED FROM PIN 2 OF V21.

1 - DC Voltage measurements are at 20,000 ohms per volt; AC Voltages measured at 1000 ohms.

2 - Socket connections are shown as bottom views.

3 - Measured values are from socket pin to common negative unless otherwise stated.

4 - Line voltage maintained at 117 volts for voltage readings.

5 - Front panels controls set at maximum.

6 - Where readings may vary according to the setting of the service controls, both minimum and maximum readings are given.

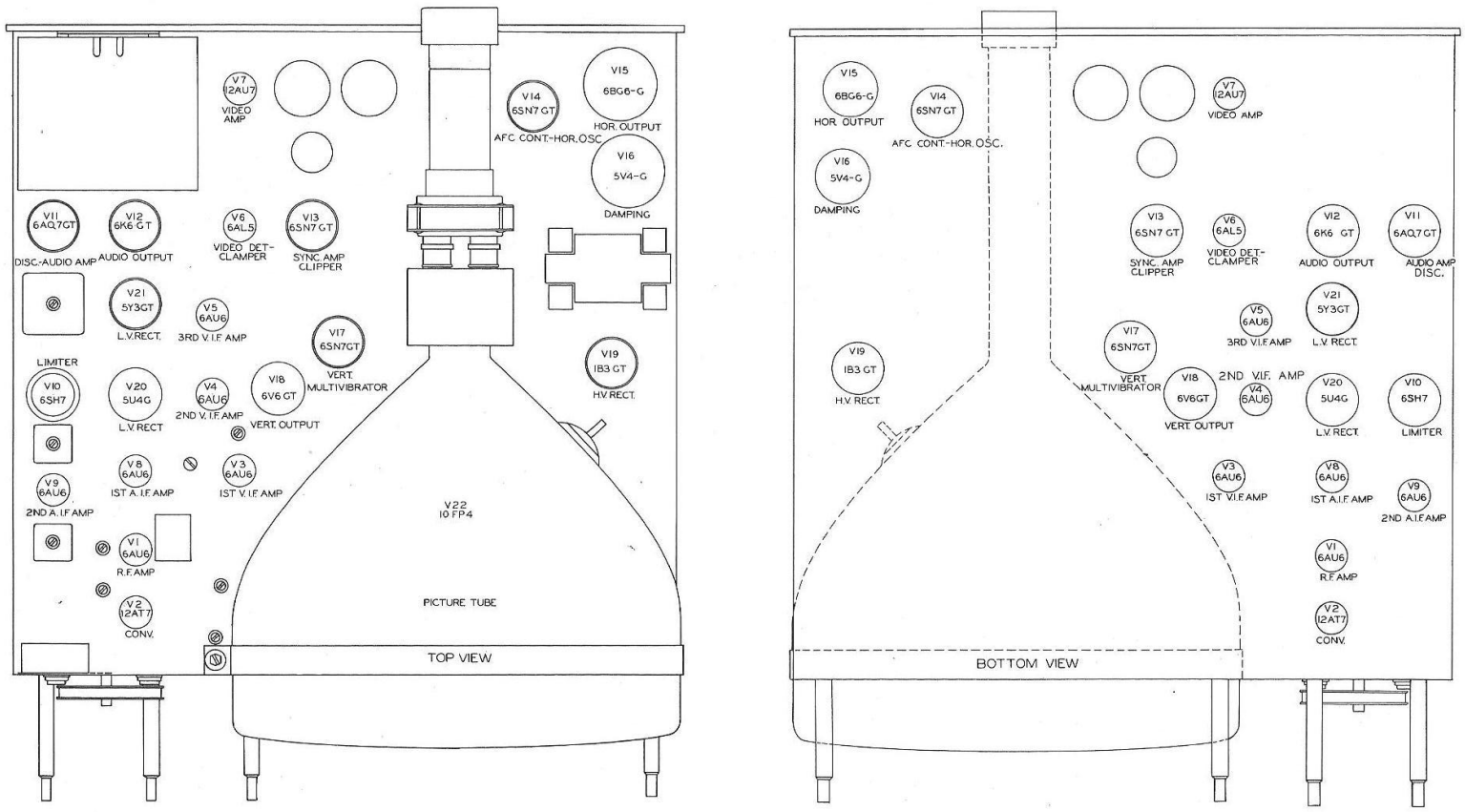

TUBE PLACEMENT CHART

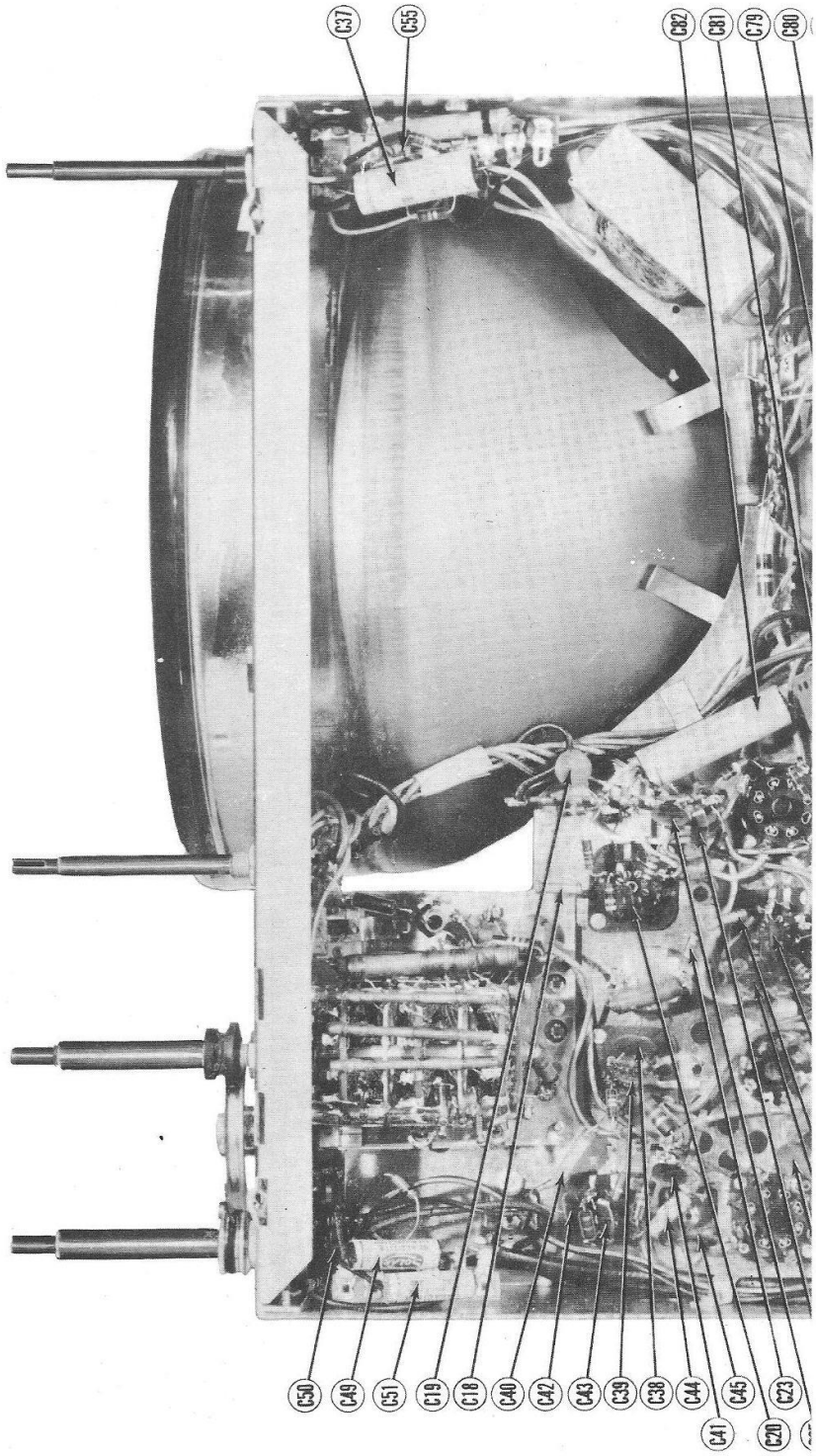
C37
C55
C82
C81
C79
C80
C50
C49
C51
C19
C18
C40
C42
C43
C39
C38
C44
C45
C23
C41
C20

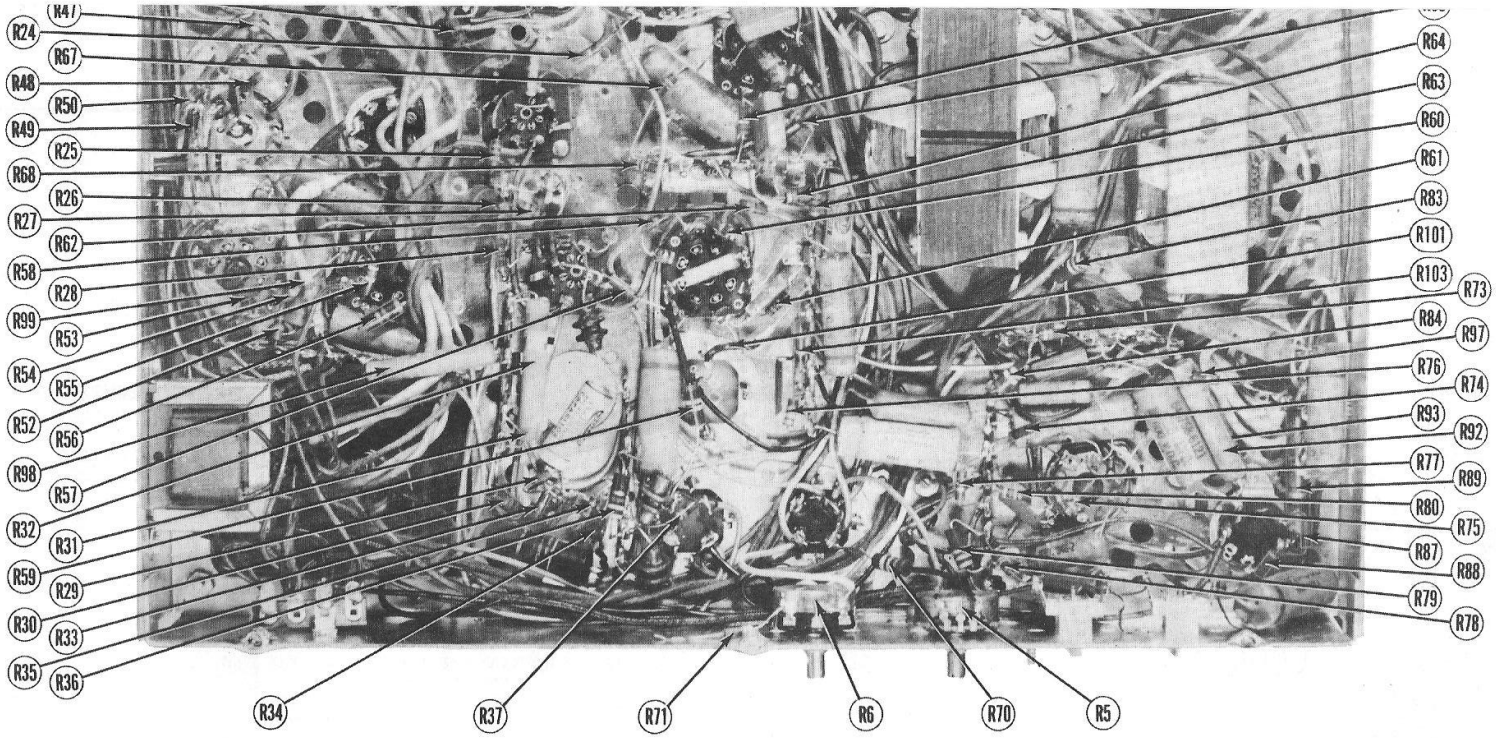

CHASSIS-BOTTOM VIEW-RESISTOR IDENTIFICATION

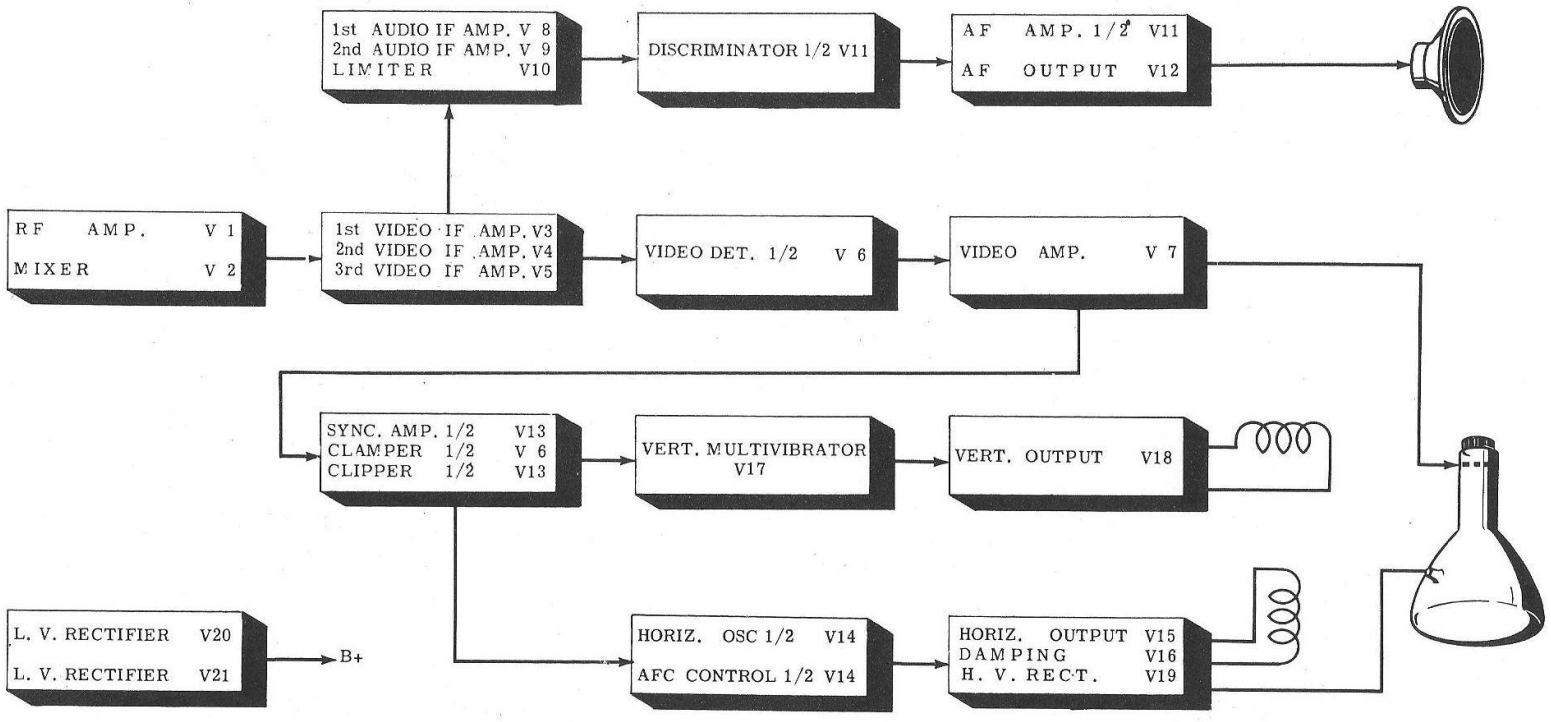

BLOCK DIAGRAM

DISASSEMBLY INSTRUCTIONS

1. Remove eight push-on type knobs from from panel.
2. Remove six screws from back and remove.
3. Disconnect speaker leads.
4. Remove four chassis screws from bottom of cabinet and slide chassis out of cabinet.
5. Remove four nuts holding speaker and remove.

CENTERING ADJUSTMENTS

Centering adjustments are made by means of two circular magnets mounted on the focus and deflection assembly. The assembly may be turned the necessary direction, and the amount of correction may be changed by rotating the large magnet with respect to the smaller one and by sliding the two magnets together or apart. Maximum effect is with the two magnets close together and aligned. Minimum effect is achieved by turning the large magnet to oppose the small one.

HORIZONTAL LINEARITY ADJUSTMENT

The horizontal drive control should first be set to minimum capacity. With the horizontal size control at approximately its correct position adjust the horizontal linearity control for best linearity. If this does not give good linearity turn the horizontal drive control slightly clockwise and repeat the adjustments. If there is a foldover of the pattern, turn the horizontal drive control clockwise until the fold disappears.