MAGNAVOX CHASSIS V18-01AA, BB, V18-02AA, BB, V18-03AA, BB, V18-04AA, BB, U18-01AA, BB, U18-02AA, BB, U18-03AA, BB, U18-04AA, BB (18 Series)

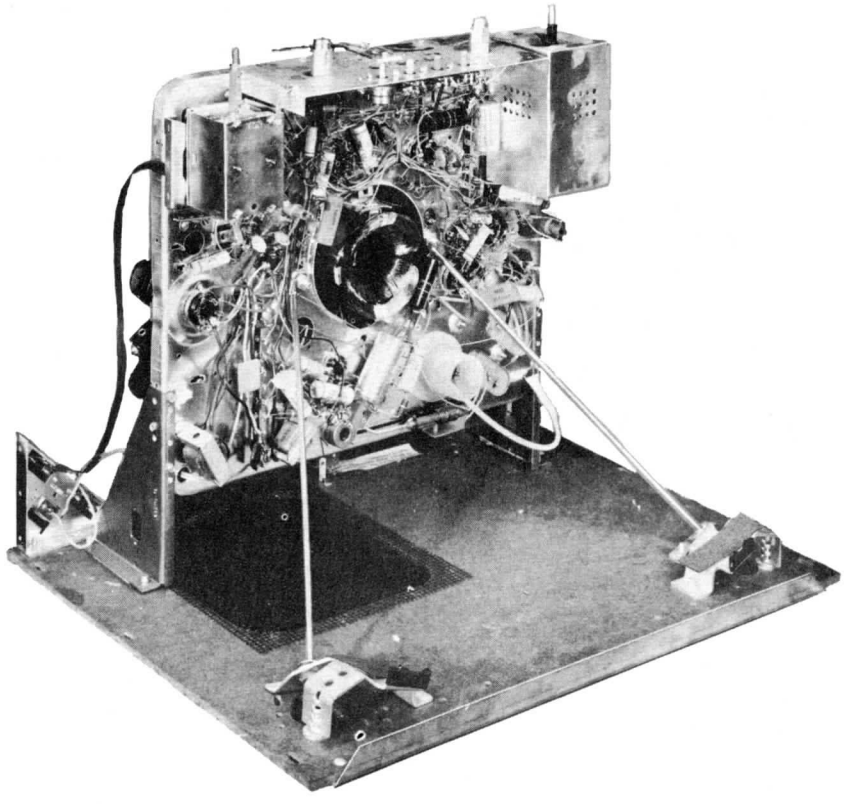

CHASSIS

U18-01AA 18 Series

SERVICING IN THE FIELD

TUNER OSCILLATOR ADJUSTMENTS

Touch-up adjustments of the VHF tuner oscillator circuit may be accomplished by removing the channel selector and fine tuning knobs.

SERVICE ADJUSTMENT LOCATION

See tube placement chart on page 5.

SPECIAL ADJUSTMENT

Focus

Focus may be varied in steps by position of plug in focus adjustment board. Readjust Ion trap for best focus consistent with maximum brightness.

HORIZONTAL OSCILLATOR FIELD ADJUSTMENT

For adjustment of the horizontal oscillator, it is necessary to remove the rear cover and supply power to the set. Set the horizontal hold control at its mid-range position and adjust the horizontal frequency slug (B1) until the picture synchronizes horizontally.

FUSES

One fuse is used for horiz. sweep circuit protection. (For location see tube placement chart.)

CENTERING

Centering is accomplished mechanically by adjusting two magnetic rings around the neck of the picture tube. Rotate the two rings around the neck of the tube until the picture is properly centered.

MAGNAVOX CHASSIS V18-01AA, BB, V18-02AA, BB, V18-03AA, BB, V18-04AA, BB, U18-01AA, BB, U18-02AA, BB, U18-03AA, BB, U18-04AA, BB (18 Series)

HOWARD W. SAMS & CO., INC. • Indianapolis 5, Indiana

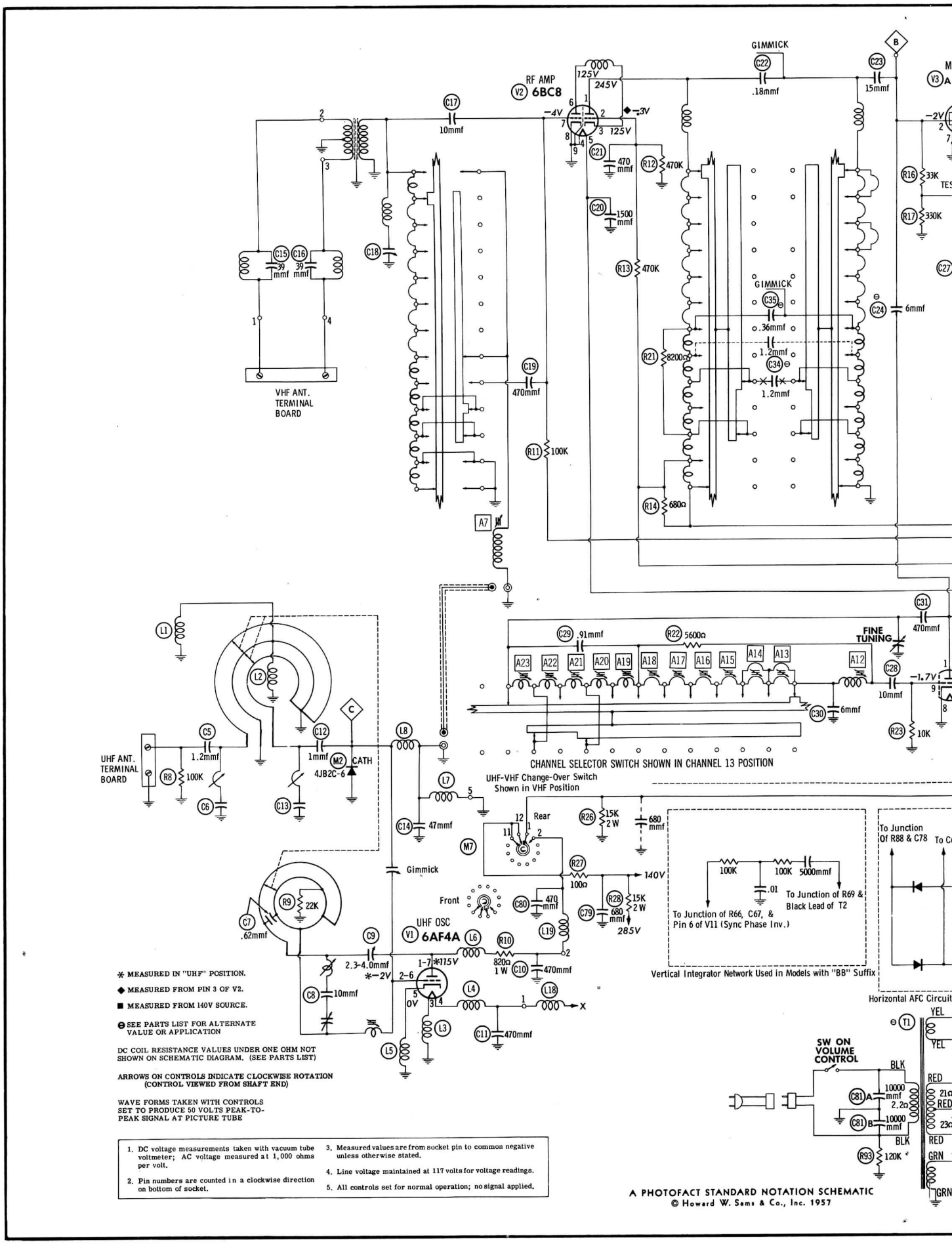
RF AMP
V2 6BC8
GIMMICK
C22
.18mmf
C23
15mmf
125V
245V
-4V
-3V
125V
C17
10mmf
C21
470 mmf
R12
470K
C20
1500 mmf
R13
470K
C15
39 mmf
C16
39 mmf
C18
VHF ANT. TERMINAL BOARD
C19
470mmf
R11
100K
R14
680Ω
R21
8200Ω
GIMMICK
C35
.36mmf
1.2mmf
C34
1.2mmf
C24
6mmf
R16
33K
R17
330K
C27
A7
C31
470mmf
FINE TUNING
C29
.91mmf
R22
5600Ω
A23
A22
A21
A20
A19
A18
A17
A16
A15
A14
A13
A12
C28
10mmf
C30
6mmf
R23
10K
CHANNEL SELECTOR SWITCH SHOWN IN CHANNEL 13 POSITION
UHF-VHF Change-Over Switch Shown in VHF Position
L1
L2
C5
1.2mmf
C12
1mmf
M2
CATH
4JB2C-6
UHF ANT. TERMINAL BOARD
R8
100K
C6
C13
L8
L7
C14
47mmf
M7
Rear
Front
Gimmick
R26
15K 2W
680 mmf
R27
100Ω
140V
R28
15K 2W
C79
680 mmf
285V
C80
470 mmf
L19
R9
22K
C7
.62mmf
C9
2.3-4.0mmf
UHF OSC
V1 6AF4A
L6
R10
820Ω 1W
C10
470mmf
C8
10mmf
L4
L18
L3
C11
470mmf
L5
X
100K
100K
5000mmf
.01
To Junction of R69 & Black Lead of T2
To Junction of R66, C67, & Pin 6 of V11 (Sync Phase Inv.)
Vertical Integrator Network Used in Models with "BB" Suffix
To Junction Of R88 & C78
Horizontal AFC Circuit
T1
YEL
YEL
RED
RED
RED
GRN
GRN
SW ON VOLUME CONTROL
BLK
BLK
C81A
10000 mmf
C81B
10000 mmf
R93
120K
* MEASURED IN "UHF" POSITION.
◆ MEASURED FROM PIN 3 OF V2.
■ MEASURED FROM 140V SOURCE.
⊖ SEE PARTS LIST FOR ALTERNATE VALUE OR APPLICATION
DC COIL RESISTANCE VALUES UNDER ONE OHM NOT SHOWN ON SCHEMATIC DIAGRAM. (SEE PARTS LIST)
ARROWS ON CONTROLS INDICATE CLOCKWISE ROTATION (CONTROL VIEWED FROM SHAFT END)
WAVE FORMS TAKEN WITH CONTROLS SET TO PRODUCE 50 VOLTS PEAK-TO-PEAK SIGNAL AT PICTURE TUBE
1. DC voltage measurements taken with vacuum tube voltmeter; AC voltage measured at 1,000 ohms per volt.
2. Pin numbers are counted in a clockwise direction on bottom of socket.
3. Measured values are from socket pin to common negative unless otherwise stated.
4. Line voltage maintained at 117 volts for voltage readings.
5. All controls set for normal operation; no signal applied.
A PHOTOFACT STANDARD NOTATION SCHEMATIC
© Howard W. Sams & Co., Inc. 1957

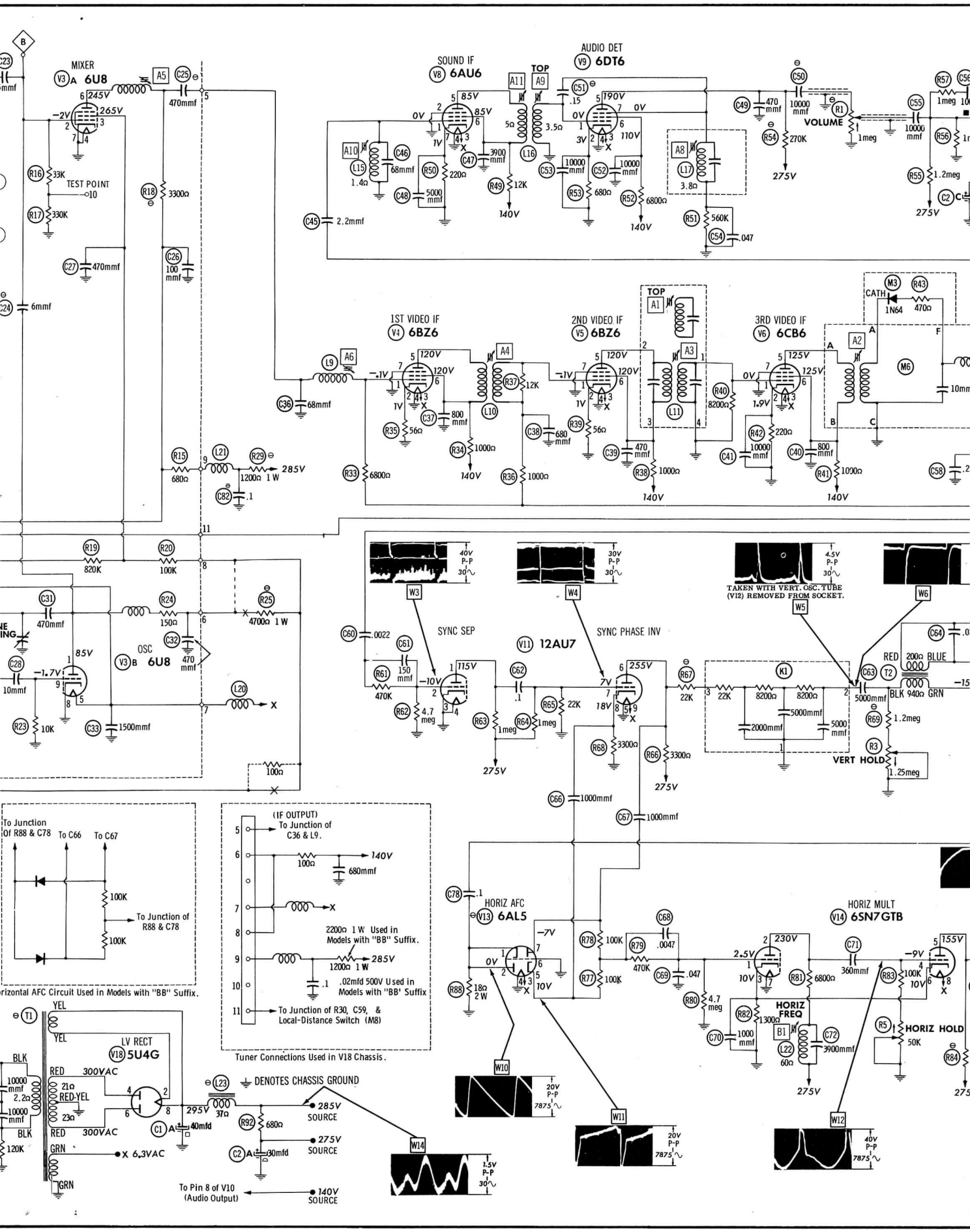
MIXER
V3A 6U8
SOUND IF
V8 6AU6
AUDIO DET
V9 6DT6
VOLUME
TEST POINT
1ST VIDEO IF
V4 6BZ6
2ND VIDEO IF
V5 6BZ6
3RD VIDEO IF
V6 6CB6
CATH
1N64
OSC
V3B 6U8
SYNC SEP
V11 12AU7
SYNC PHASE INV
TAKEN WITH VERT. OSC. TUBE (V12) REMOVED FROM SOCKET.
VERT HOLD
HORIZ AFC
V13 6AL5
HORIZ MULT
V14 6SN7GTB
HORIZ FREQ
HORIZ HOLD
To Junction Of R88 & C78
To C66
To C67
To Junction of R88 & C78
Horizontal AFC Circuit Used in Models with "BB" Suffix.
(IF OUTPUT)
To Junction of C36 & L9.
2200Ω 1 W Used in Models with "BB" Suffix.
.02mfd 500V Used in Models with "BB" Suffix
To Junction of R30, C59, & Local-Distance Switch (M8)
Tuner Connections Used in V18 Chassis.
LV RECT
V18 5U4G
DENOTES CHASSIS GROUND
285V SOURCE
275V SOURCE
140V SOURCE
To Pin 8 of V10 (Audio Output)

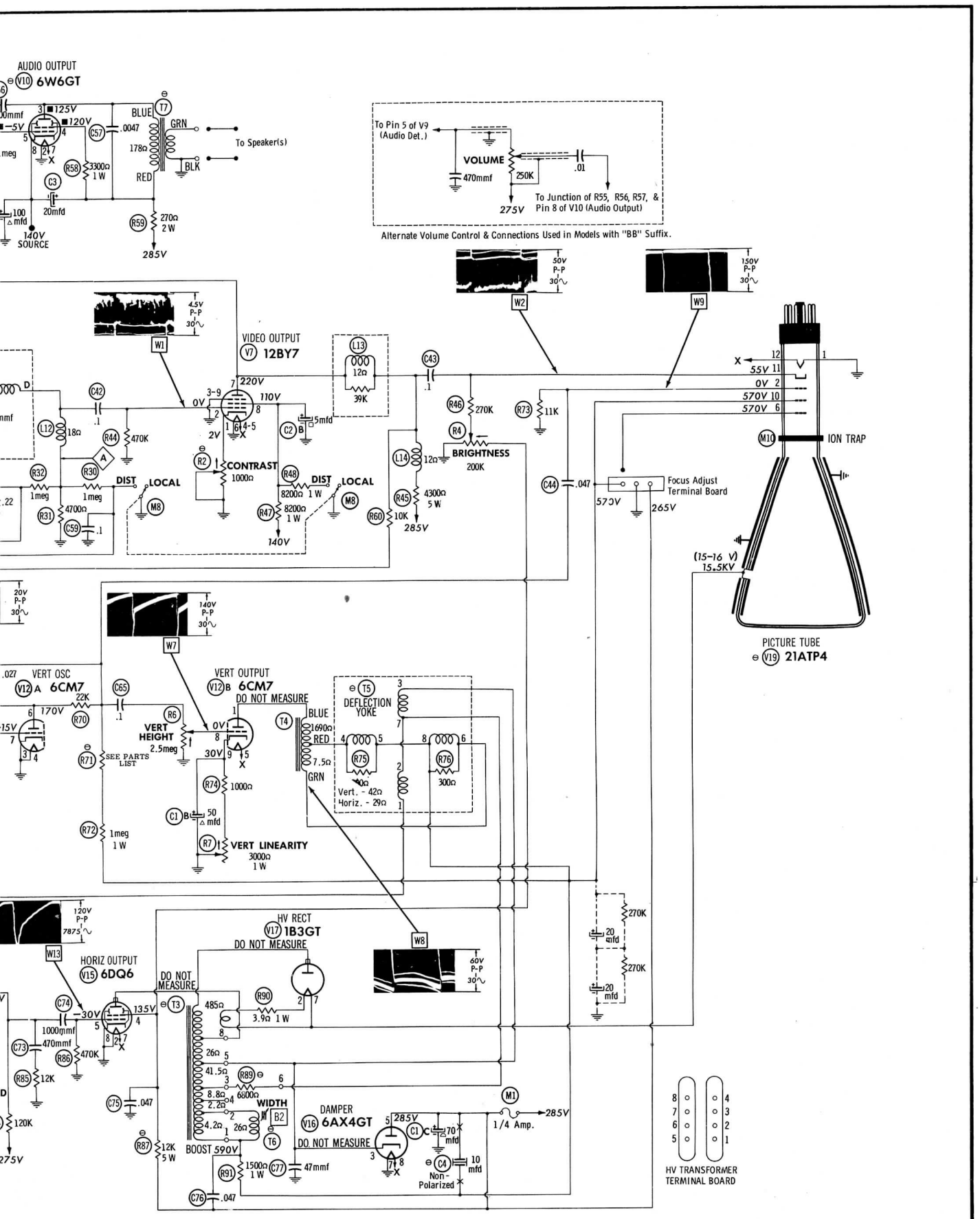

MAGNAVOX CHASSIS V18-01AA, BB, V18-02AA, BB, V18-03AA, BB, V18-04AA, BB, U18-01AA, BB, U18-02AA, BB, U18-03AA, BB, U18-04AA, BB (18 Series)

MAGNAVOX CHASSIS V18-01AA, BB, V18-02AA, BB, V18-03AA, BB, V18-04AA, BB, U18-01AA, BB, U18-02AA, BB, U18-03AA, BB, U18-04AA, BB (18 Series)

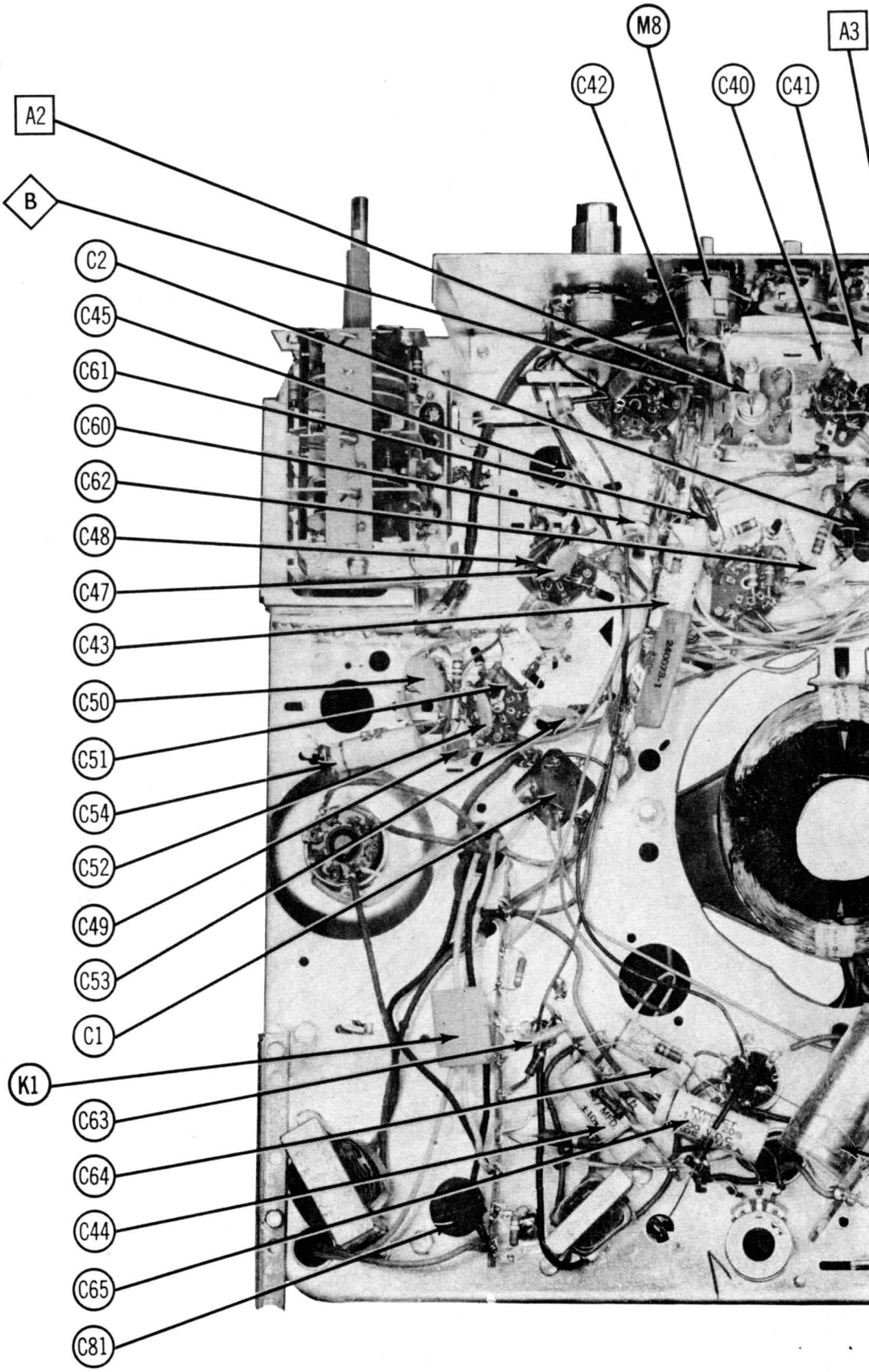

CHASSIS BOTTOM VIEW-CAPACITOR

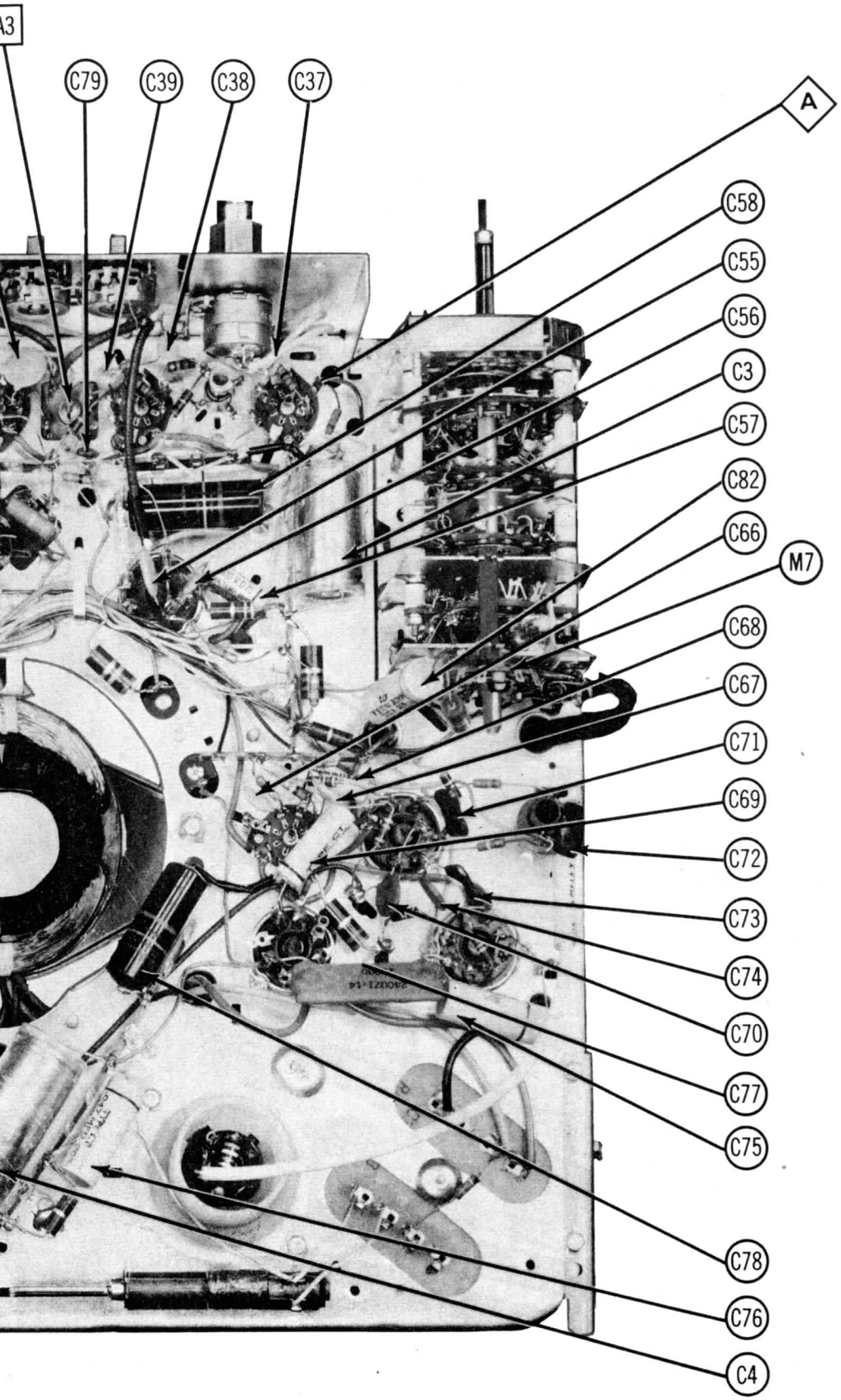

OR AND ALIGNMENT IDENTIFICATION

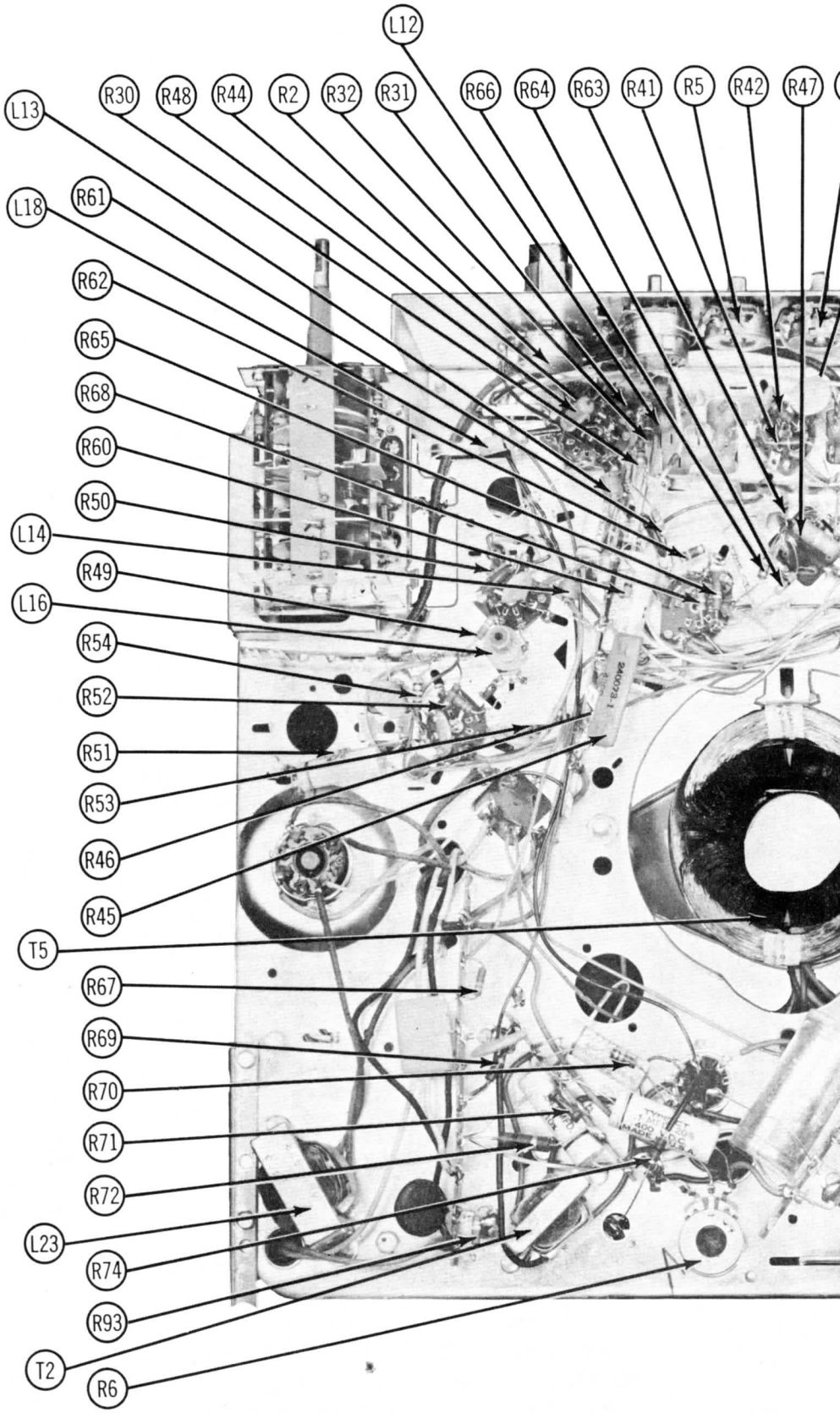

CHASSIS BOTTOM VIEW-RESISTOR

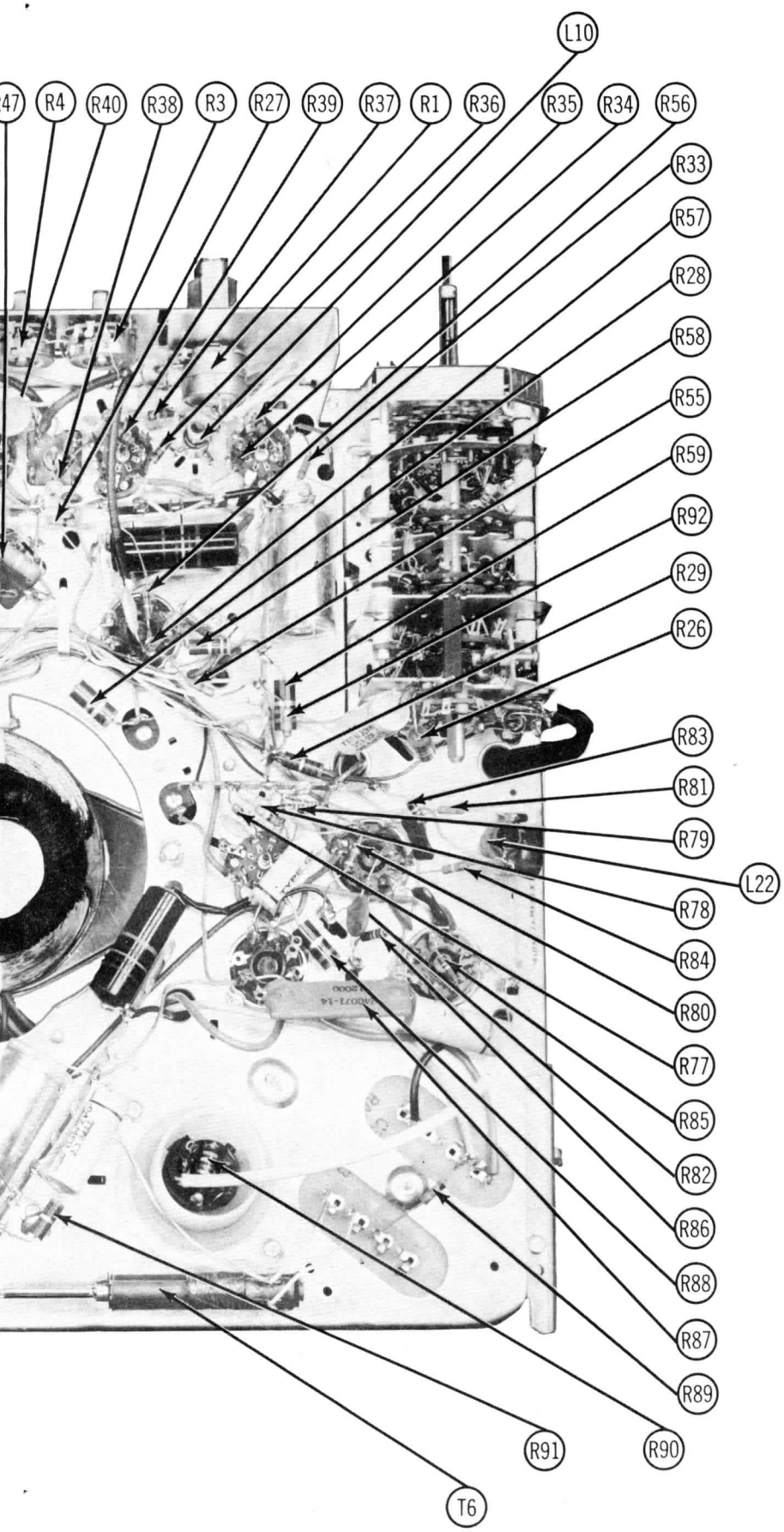

OR AND INDUCTOR IDENTIFICATION

TUBE PLACEMENT CHART

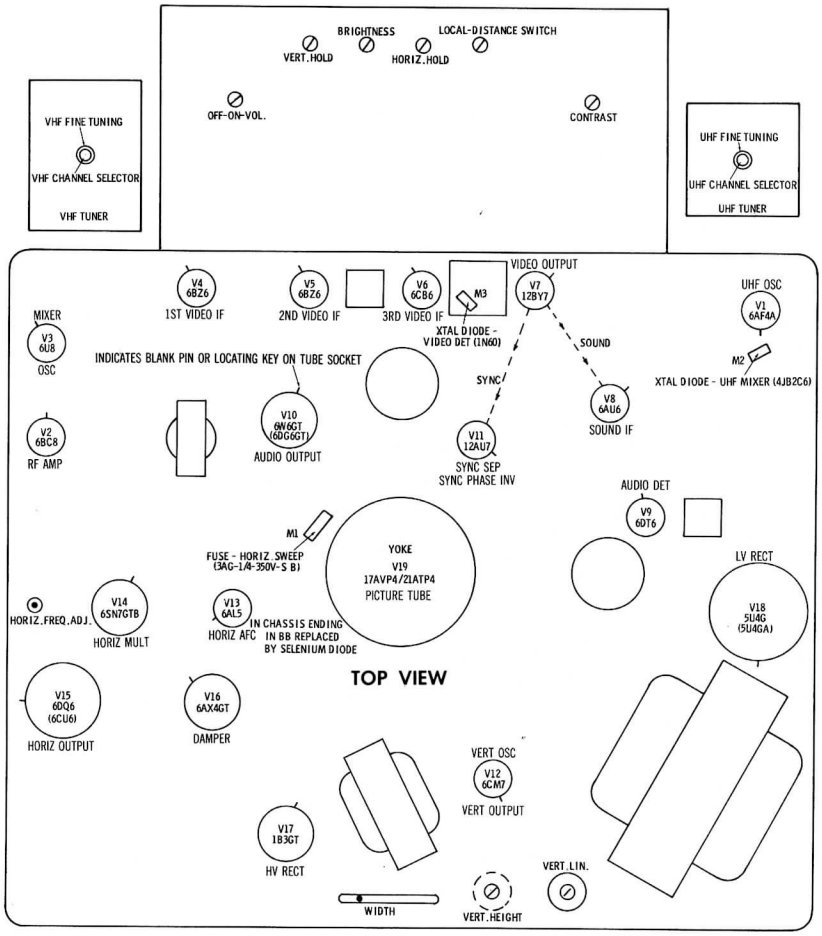

TUBE FAILURE CHECK CHART

The following chart lists tubes whose failures are most likely to produce the indicated symptoms. Refer to tube placement chart for location and type of tube.

POWER SUPPLY FAILURE
No raster, no sound - V18, V10

LOSS OF PICTURE OR SOUND
No pic, no sound, has raster - V4, V5, V6, Diode (M3), V7, V10
No pic, no sound, has snow - V2, V3, V4, V1 (UHF)
No pic, has sound, has raster -V7, V19
Has pic, no sound - V8, V9, V10

SYNC FAILURE
No vert. sync - V11, V12
No horiz. sync - V11, V13 (Diode in "BB" Chassis), V14
No vert. or horiz. sync - V11

SWEEP FAILURE
No raster, has sound - V13, V14, V15, V16, V17, V19, Fuse (M1)
No vertical deflection - V12
Poor vert. linearity or foldover - V12
Poor horiz. linearity or foldover - V14, V15, V16
Narrow picture - V14, V15, V16, V18
Vert. off freq. - V11, V12
Horiz. off freq. - V11, V13, V14

ALIGNMENT INSTRUCTIONS

ALIGNMENT INSTRUCTIONS—READ CAREFULLY BEFORE ATTEMPTING ALIGNMENT

The high voltage lead should be securely taped and kept away from the chassis.

VIDEO IF ALIGNMENT

Connect the negative lead of a 3 volt bias battery to the ungrounded side of C58. Connect the negative lead of a 1.5 volt bias battery to the ungrounded side of C59. Connect the positive leads to chassis. Set the local-distant switch to local position. Turn the contrast control fully counter clockwise.
Connect the synchronized sweep voltage from the sweep generator to the horizontal input of the oscilloscope for horizontal deflection.

	DUMMY ANTENNA	SWEEP GENERATOR COUPLING	SWEEP GENERATOR FREQUENCY	MARKER GENERATOR FREQUENCY	CHANNEL	CONNECT SCOPE	ADJUST	REMARKS
1.	.001MFD	High side to grid (pin 1) of V4. Low side to chassis.	43.0MC (10MC Swp)	47.25MC	Any unused channel	Vert. Amp. thru 10K to point Ⓐ. Low side to chassis.	A1	Preset A4 by turning fully counter clockwise. Adjust to place marker in trap notch as in Fig. 1. This may be done with the slug in either of two positions. Use the one farthest from the chassis.
2.	"	"	"	42.75MC 45.75MC	"	"	A2, A3, A4	Adjust A2 for maximum gain with markers as indicated in Fig. 2. Adjust A3 to place 45.75MC at 50% on curve. Adjust A4 to place 42.75MC at 60%. Use only enough sweep generator output to provide usable pattern on scope.
3.	"	High side to point Ⓑ. Low side to chassis.	"	"	Any unused high band channel	"	A5, A6	Adjust A5 for maximum gain with 45.75MC at 45% on response curve. Adjust A6 for maximum gain and proper tilt as in Fig. 2.
4.	1000Ω	High side to point Ⓒ. Low side to tuner chassis.	"	"	UHF	"	A7	Adjust for response similar to Fig. 2 with MINIMUM tilt.

SOUND IF ALIGNMENT

Tune the receiver to a strong local TV station and adjust A8 for maximum volume and MINIMUM distortion.
Reduce the signal input by removing the antenna or by placing an attenuator between the antenna and antenna terminals so that with the volume control set for maximum volume, the sound will be barely audible.
Adjust A9 for MINIMUM noise and clearest sound.
With the same weak signal, adjust A10 and A11 for MINIMUM noise and clearest sound.
Reduce the signal input even further until noise is present retouch A9 for MINIMUM noise and clearest sound.

VHF OSCILLATOR ALIGNMENT

Leave bias connect as under Video IF Alignment. Leave local-distant switch in local position and contrast full counter clockwise.
Connect the synchronized sweep voltage from the sweep generator to the horizontal input of the oscilloscope for horizontal deflection.
Set the fine tuning control to the mid-position of its range.
Use only enough sweep generator output to provide usable pattern on scope.

	DUMMY ANTENNA	SWEEP GENERATOR COUPLING	SWEEP GENERATOR FREQUENCY	MARKER GENERATOR FREQUENCY	CHANNEL	CONNECT SCOPE	ADJUST	REMARKS
5.	Fig. 3	Across antenna terminals thru network (Fig. 3).	213MC (10MC Swp)	211.25MC 215.75MC	13	Vert. Amp. thru 47K to point Ⓐ. Low side to chassis.	A12	Adjust to place sound marker in trap notch as in Fig. 4. Video marker should fall at 50%.
			207MC (10MC Swp)	205.25MC 209.75MC	12		A13	
			201MC (10MC Swp)	199.25MC 203.75MC	11		A14	
			195MC (10MC Swp)	193.25MC 197.75MC	10		A15	
			189MC (10MC Swp)	187.25MC 191.75MC	9		A16	
			183MC (10MC Swp)	181.25MC 185.75MC	8		A17	
			177MC (10MC Swp)	175.25MC 179.75MC	7		A18	
			85MC (10MC Swp)	83.25MC 87.75MC	6		A19	
			79MC (10MC Swp)	77.25MC 81.75MC	5		A20	
			69MC (10MC Swp)	67.25MC 71.75MC	4		A21	
			63MC (10MC Swp)	61.25MC 65.75MC	3		A22	
			57MC (10MC Swp)	55.25MC 59.75MC	2		A23	

RF, MIXER AND UHF ALIGNMENT

This portion of the receiver has been properly aligned at the factory and is very stable. Alignment of this portion should not be required in the field.

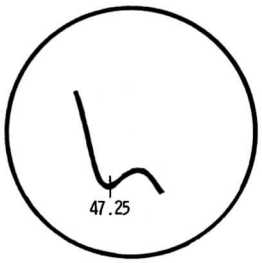

FIG. 1

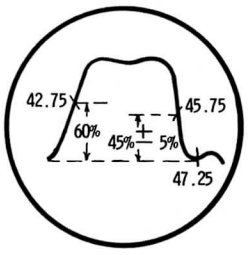

FIG. 2

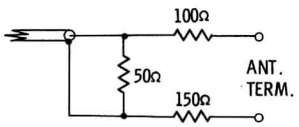

FIG. 3

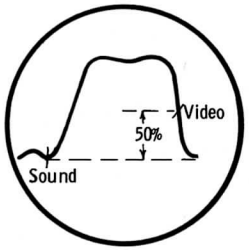

FIG. 4

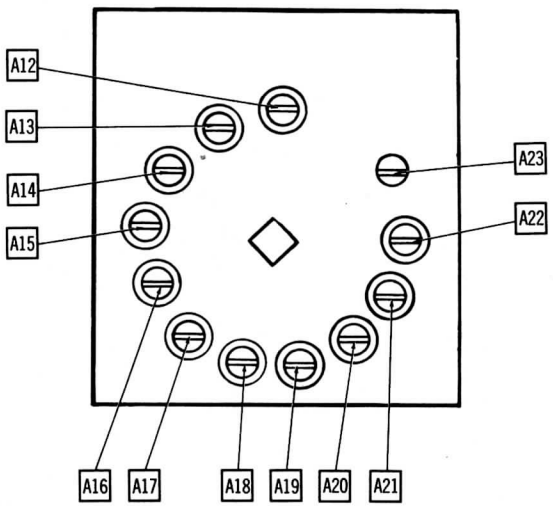

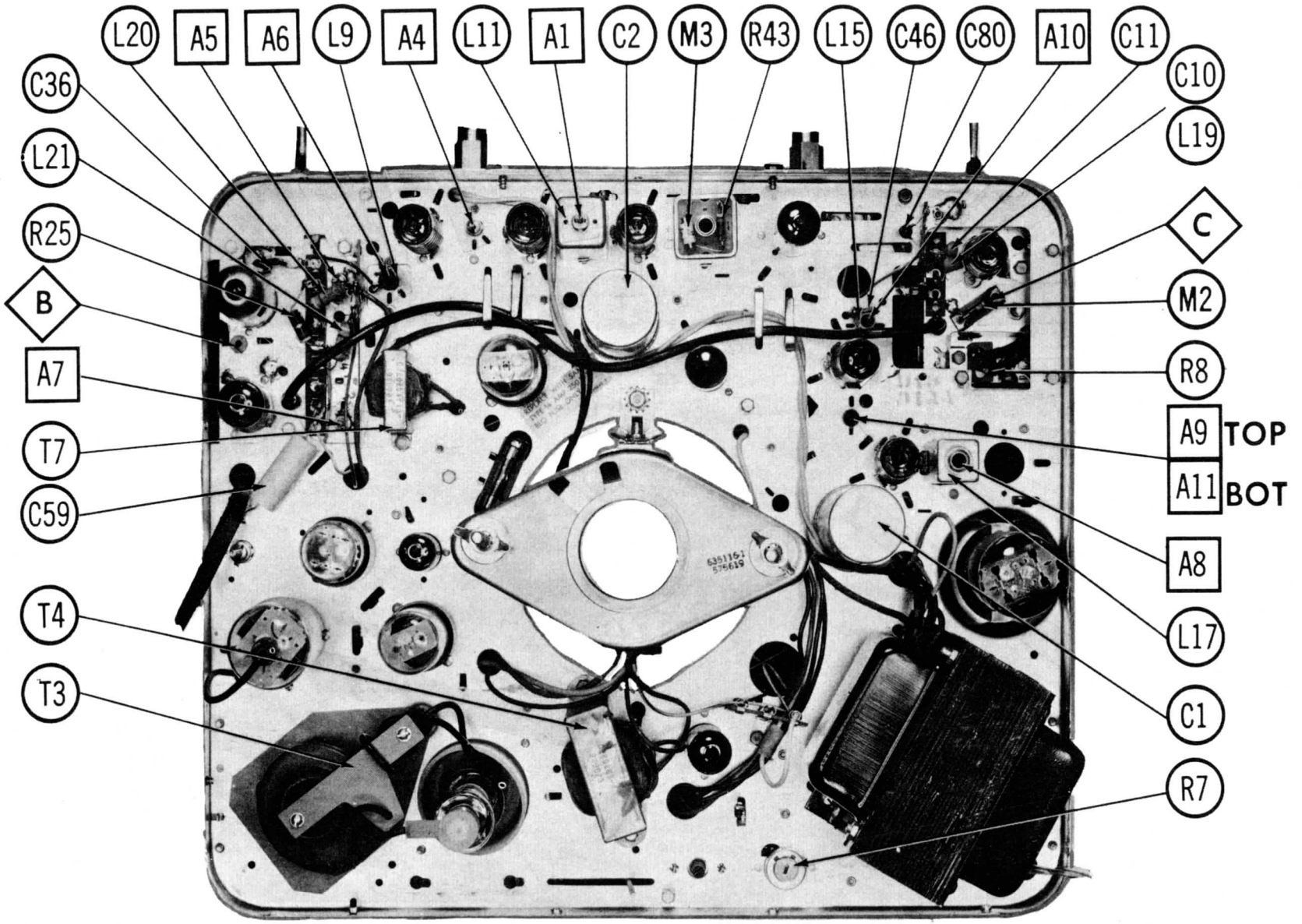

CHASSIS-TOP VIEW

MAGNAVOX CHASSIS V18-01AA, BB, V18-02AA, BB, V18-03AA, BB, V18-04AA, BB, U18-01AA, BB, U18-02AA, BB, U18-03AA, BB, U18-04AA, BB (18 Series)

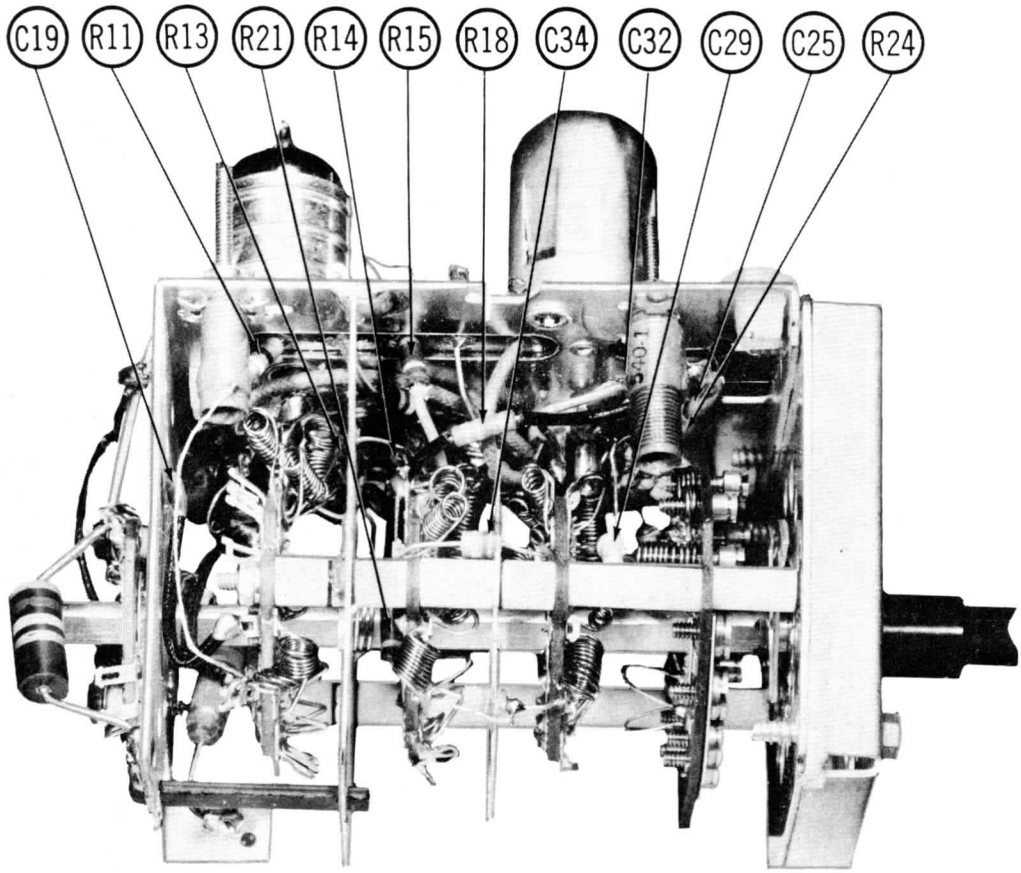

VHF TUNER-LEFT SIDE

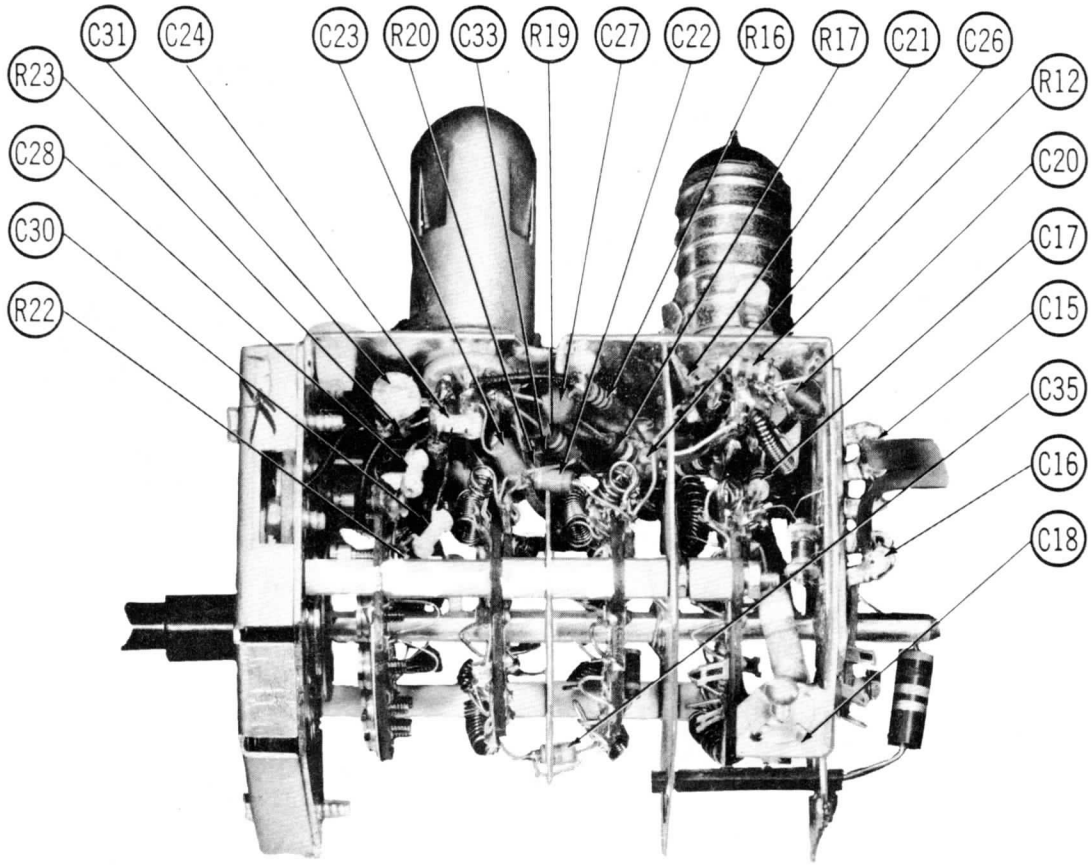

VHF TUNER-RIGHT SIDE

RESISTANCE MEASUREMENTS

ITEM	TUBE	Pin 1	Pin 2	Pin 3	Pin 4	Pin 5	Pin 6	Pin 7	Pin 8	Pin 9
V1	6AF4A	■ °900Ω	22K	0Ω	.1Ω	0Ω	22K	■ °900Ω		
V2	6BC8	† 1900Ω	220K	INF	0Ω	.1Ω	INF	1.1Meg	0Ω	0Ω
V3	6U8	■ 500Ω	360K	■ 100K	0Ω	.1Ω	† 5200Ω	0Ω	0Ω	10K
V4	6BZ6	1Meg	56Ω	.1Ω	0Ω	■ 1000Ω	■ 1000Ω	0Ω		
V5	6BZ6	1Meg	56Ω	.1Ω	0Ω	■ 1000Ω	■ 1000Ω	0Ω		
V6	6CB6	.1Ω	220Ω	.1Ω	0Ω	■ 1000Ω	■ 1000Ω	0Ω		
V7	12BY7	● 100Ω	470K	0Ω	.1Ω	.1Ω	0Ω	† 4300Ω	■ 8200Ω	0Ω
V8	6AU6	1.4Ω	0Ω	.1Ω	0Ω	■ 12K	■ 12K	220Ω		
V9	6DT6	3.5Ω	680Ω	.1Ω	0Ω	† 270K	■ 6800Ω	560K		
V10	6W6GT	TP	0Ω	† 480Ω	† 3600Ω	550K	NC	.1Ω	70K	
V11	12AU7	† 1Meg	4.7Meg	0Ω	0Ω	0Ω	† 4000Ω	22K	3300Ω	.1Ω
V12	6CM7	°3200Ω	NC	0Ω	0Ω	.1Ω	‡ 1.8Meg	● 1.7Meg	● 1.9Meg	● 2500Ω
V13	6AL5	18Ω	18Ω	.1Ω	0Ω	5Meg	0Ω	5Meg		
V14	6SN7GTB	4.7Meg	† 7500Ω	1300Ω	120K	† 150K	1300Ω	0Ω	.1Ω	
V15	6DQ6	NC	0Ω	NC	† 12K	470K	TP	.1Ω	0Ω	TOP CAP ‡ 26Ω
V16	6AX4GT	NC	NC	7Meg	NC	† 37Ω	NC	0Ω	.1Ω	
V17	1B3GT	PINS 1 THRU 8 HAVE INFINITE RESISTANCE								TOP CAP ‡ 511Ω
V18	5U4G	NC	20K	NC	21Ω	NC	23Ω	NC	20K	
V19	PIX TUBE	0Ω	11K	PIN 6 1600Ω	PIN 10 1600Ω	PIN 11 ● † 310K	PIN 12 .1Ω			

● THIS READING WILL VARY. CONTROL SET FOR NORMAL OPERATION.
° MEASURED IN UHF POSITION
† MEASURED FROM PIN 8 OF V18.
‡ MEASURED FROM PIN 3 OF V16.
■ MEASURED FROM 140V SOURCE.
TP TIE POINT
NC NO CONNECTION

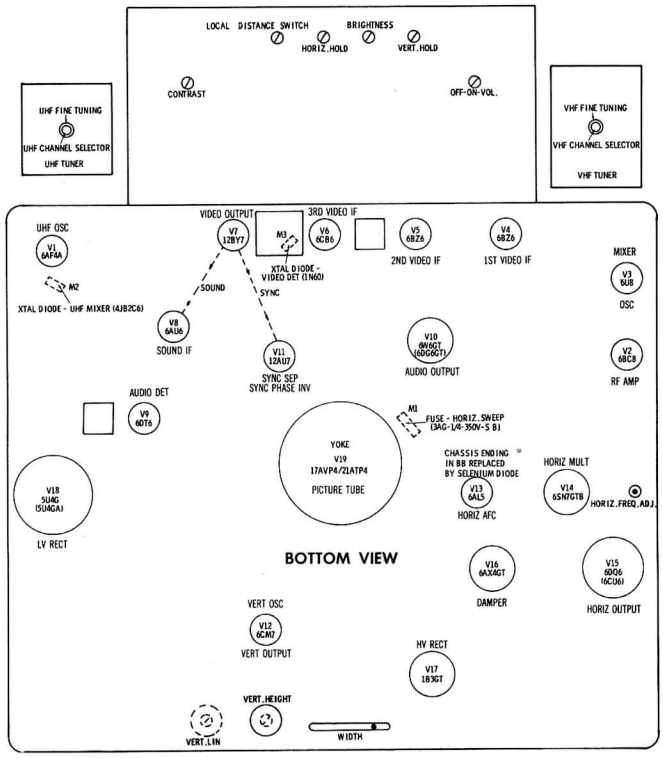

TUBE PLACEMENT CHART

SET 348 FOLDER 6

TUBES (GENERAL ELECTRIC, SYLVANIA)

ITEM No.	USE	TYPE	NOTES
V1	UHF Oscillator	6AF4A	
V2	RF Amplifier	6BC8	
V3	Mixer-Oscillator	6U8	
V4	1st. Video IF Amplifier	6BZ6	
V5	2nd. Video IF Amplifier	6BZ6	
V6	3rd. Video IF Amplifier	6CB6	
V7	Video Output	12BY7	
V8	Sound IF Amplifier	6AU6	
V9	Audio Detector	6DT6	

ITEM No.	USE	TYPE	NOTES
V10	Audio Output	6W6GT	Note 1
V11	Sync Sep. -Sync Phase Inv.	12AU7	
V12	Vert. Osc. -Vert. Output	6CM7	
V13	Horiz. AFC	6AL5	Note 2
V14	Horiz. Mult.	6SN7GTB	
V15	Horiz. Output	6DQ6	Note 4
V16	Damper	6AX4GT	
V17	HV Rectifier	1B3GT	
V18	LV Rectifier	5U4G	Note 3

Note 1. 6DG6GT used in chassis ending in BB.
Note 2. Used only in chassis ending in AA.
Note 3. 5U4GA may be used in some versions.
Note 4. 6CU6 may be used in some versions.

PICTURE TUBE

ITEM No.	REPLACEMENT DATA				NOTES
	MAGNAVOX PART No.	CBS PART No.	GENERAL ELECTRIC PART No.	SYLVANIA PART No.	
V19	21ATP4 17AVP4	21ATP4 ① 17AVP4A ①	21ATP4 / 21ATP4A ① 17AVP4 17AVP4A ①	21ATP4/ 21ATP4A② 17AVP4 17AVP4A②	① Aluminized ② Silver screen "85"

ELECTROLYTIC CAPACITORS

ITEM No.	RATING		REPLACEMENT DATA						
	CAP.	VOLT.	MAGNAVOX PART No.	AEROVOX PART No.	CORNELL-DUBILIER PART No.	MALLORY PART No.	PYRAMID PART No.	SANGAMO PART No.	SPRAGUE PART No.
C1A	■40	350	270021-62	RE1008	BO480	FP264.5	TMT-97	T-110	R2351 *
B	▲50	50			BR505	TC39	TD-30-350	MT-0550	
C	▰70	350							
C2A	▰30	350	270021-55	AFH3-114-70		FP247		T-602	R2348 *
B	■5	350				TC60		MT-4530	
C	▲100	200							
C3	20	350	270027-20	PRS450V20	BR2035	TC65	TD-20-350	FM-4520	TVA-1608
C4	10	350	270027-26 (Note 1)	NP-PRS350-VNP10	BR2035}† BR2035}†	TC65 } † TC65 } †		MT-4520}† MT-4520}†	R2327 *

Note 1. Non-polarized unit.
† Connect negative leads together.
* Non-catalog item.

FIXED CAPACITORS

Capacity values given in the rating column are in mfd. for Paper Capacitors, and in mmfd. for Mica and Ceramic Capacitors.

ITEM No.	RATING		REPLACEMENT DATA							NOTES
	CAP.	VOLT	MAGNAVOX PART No.	AEROVOX PART No.	CENTRALAB PART No.	CORNELL-DUBILIER PART No.	ERIE PART No.	MALLORY PART No.	SPRAGUE PART No.	
C5	1.2			NP0-SI 1	TCZ-1	C10V15C	TCO-1	ZT-5515	5TCCB-V1	
C6			250188-10							
C7	.62									
C8	10			NP0-SI 10	TCZ-10	C10Q1C	ED-10	UC-541	5GA-Q1	
C9	2.3-4.0		250220-2							
C10	470		250175-8	BPD-00047	DD-471	BYA10T47	ED-470	UC-5347	5GA-T47	
C11	470		250175-8	BPD-00047	DD-471	BYA10T47	ED-470	UC-5347	5GA-T47	
C12	1		250221-114	NP0-SI 1	TCZ-1	C10V15C	TCO-1	ZT-5515	5TCCB-V1	
C13			250188-10							
C14	47			N750-SI 47	TCN-47	C10Q47U	TC7-47	NT-5447	5TCU-Q47	
C15	39		250175-20	N750-SI 39	TCN-39	C10Q39U	TC7-39			
C16	39		250175-20	N750-SI 39	TCN-39	C10Q39U	TC7-39			
C17	10		250221-127	NP0-SI 10	TCZ-10	C10Q1C	ED-10	UC-541	5GA-Q1	
C18			250188-6							
C19	470		250175-8	BPD-00047	DD-471	BYA10T47	ED-470	UC-5347	5GA-T47	
C20	1500		250175-10	BPD-0015	DD-152	BYA10D15	ED-1500	UC-5215	5GA-D15	
C21	470		250175-8	BPD-00047	DD-471	BYA10T47	ED-470		5GA-T47	
C22	.18		250216-4							
C23	15		250207-5	NP0-SI 15	TCZ-15	C10Q15C	ED-15	UC-5415	5GA-Q15	
C24	6									Note 2
C25	470		250175-8	BPD-00047	DD-471	BYA10T47	ED-470	UC-5347	5GA-T47	Note 3
C26	100		250175-24	BPD-0001	DD-101	C10T1C	ED-100	UC-531	5GA-T1	
C27	470		250175-8	BPD-00047	DD-471	BYA10T47	ED-470	UC-5347	5GA-T47	
C28	10		250088-136	NP0-SI 10	TCZ-10	C10Q1C	ED-10	UC-541	5GA-Q1	
C29	91									
C30	6		250088-143							
C31	470		250218-15	BPD-00047	DD-471	BYA10T47	ED-470	UC-5347	5GA-T47	
C32	470		250175-8	BPD-00047	DD-471	BYA10T47	ED-470	UC-5347	5GA-T47	
C33	1500		250175-10	BPD-0015	DD-152	BYA10D15	ED-1500	UC-5215	5GA-D15	
C34	1.2		250221-115	NP0-SI 1.2	TCZ-1	C10V15C	TCO-1	ZT-5515	5TCCB-V1	Note 4
C35	.36		250216-5							Note 5
C36	68			NP0-SI 68	TCZ-68	C10Q68C	TCO-68		5TCC-Q68	
C37	800		250218-14	BPD-008	DD-801	L10T8	ED-820		5GA-T8	
C38	680		250218-4	DI-680	DD-681	L10T68	ED-680		5GA-T68	
C39	470		250218-15	DI-470	DD-471	L10T47	ED-470		5GA-T47	
C40	800		250218-14		DD-801	L10T8	ED-820		5GA-T8	
C41	10000		250175-2	BPD-01	DD-103	BYA10S1M	GP-10000	DC511	5HK-S1	
C42	.1	200	250185-16	P288N-1	DF-104	CUB2P1		GEM-201	2TM-P1	
C43	.1	200	250202-13	P288N-1	DF-104	CUB2P1		GEM-201	2TM-P1	
C44	.047	400	250212-7	BPD-05	DF-503	CUB4S47		GEM-4147	4TM-S47	
C45	2.2		250221-118	NP0-SI 2.2	TCZ-2R2	C10V22C	TCO-2.2		5TCCB-V22	
C46	68		250218-7	N750-SI68	TCN-68	C10Q68U	TC7-68		5TCU-Q68	
C47	3900		250175-31	BPD-004	D6-402	BYA10D4	GP-4000	UC-5240	5GA-D39	
C48	5000		250175-1	BPD-005	DD-502	BYA10D5	GP-5000	DC525	5HK-D5	
C49	470		250218-6	BPD-00047	DD-471	BYA10T47	ED-470	UC-5347	5GA-T47	
C50	10000		250175-2	BPD-01	DD-103	BYA10S1M	GP-10000	DC511	5HK-S1	Note 6
C51	.15		250221-203							Note 6
C52	10000		250218-19	BPD-01	DD-103	BYA10S1M	GP-10000	DC511	5HK-S1	
C53	10000		250218-19	BPD-01	DD-103	BYA10S1M	GP-10000	DC511	5HK-S1	
C54	.047	200	250202-11	BPD-05	DF-503	CUB2S47		GEM-2147	2TM-S47	
C55	10000		250175-2	BPD-01	DD-103	BYA10S1M	GP-10000	DC511	5HK-S1	
C56	100		250218-22	N750-SI 100	TCN-100	C10T1U	TC7-100	NT-531	5TCU-T1	
C57	.0047	600	250201-5	BPD-0047	DD-472	CUB6D47	GP-4700	GEM-6247	6TM-D47	
C58	.22	200	250202-15	P288N-22		CUB2P22		GEM-2022	2TM-P22	
C59	.1	200		P288N-1	DF-104	CUB2P1		GEM-201	2TM-P1	
C60	.0022	400	250211-3	BPD-0022	D6-222	CUB4D22	GP-2200	GEM-4222	4TM-D22	
C61	150		250229-534	BPD-00015	DD-151	L10T15	ED-150	UC-5315	5GA-T15	
C62	.1	400	250211-13	P488N-1	DF-104	CUB4P1		GEM-401	4TM-P1	
C63	5000		250175-1	BPD-005	DD-502	BYA10D5	GP-5000	DC525	5HK-D5	
C64	.027	400	250212-9	BPD-03	DF-303	CUB4S27		GEM-4127	4TM-S27	
C65	.1	400	250211-13	P488N-1	DF-104	CUB4P1		GEM-401	4TM-P1	
C66	1000		250218-8							
C67	1000		250218-8							

PARTS LIST AN

CAPA

ITEM No.	RATING		MAGNAVOX PART No.	AEROVOX PART No.	CENTRA PART
	CAP.	VOLT			
C68	.0047	400	250212-4	BPD-05	DD-47
C69	.047	200	250212-5	BPD-05	DF-50
C70	1000		250218-8	BPD-001	DD-10
C71	360		250229-343	1464-00036	
C72	3900		250229-468	1464-0039	
C73	470		250229-346	1464-00047	
C74	1000		250218-8		
C75	.047	400	250211-11	BPD-05	DF-50
C76	.047	400	250211-11	BPD-05	DF-50
C77	47	4000	250175-32		
C78	.1	600	250201-13		DF-10
C79	680		250218-4	BPD-00068	DD-68
C80	470		250218-6		D6-47
C81A	10000 }		250219-3	BPD-2X01	DDM2-
B	10000 }				
C82	.1	400	250211-13	P488N-1	DF-10

Note 2. Some versions may use a 6.8MMF in this applica
Note 3. Some versions may use a 27MMF in this applicati
Note 4. Not used in some versions.
Note 5. Some versions may use a .56MMF in this applica
Note 6. Not used in chassis ending in BB.
Note 7. A 20000MMF used in chassis ending in BB.

CON

ITEM No.	RATING		REPLACEME		
	RESIST-ANCE	WATTS	MAGNAVOX PART No.	CENTRALAB PART No.	CLARO PART
R1A	1Meg	½	220126-46	AB-70	A47-1M
B	Shaft			AK-3	FS-3
C	Switch			KB-1	SWE-12
R2A	1000Ω	½	220126-50		
B	Shaft				
R3A	1.25Meg	½	220132-3	BX-742	A47-1.5
B	Shaft			Not Req.	FKS-1/4
R4A	200K	½	220132-2	BX-46	A47-20
B	Shaft			Not Req.	FKS-1/4
R5A	50K	½	220132-1	BX-31	A47-50
B	Shaft			Not Req.	FKS-1/4
R6A	2.5Meg	½	220146-2	AB-83	A47-2.5
B	Shaft			AK-1	FKS-1/4
R7	3000Ω	1	220120-3		

Note 1. An alternate 250K control part #220135-2 used in ch
Note 2. An alternate 600Ω control part #220126-56 used in c

RESIS

All wattages 1/2 watt, or less

ITEM No.	RATING		REPLACEMENT DATA		NOTES
	OHMS	WATT	MAGNAVOX PART No.	IRC PART No.	
R8	100K		230104-86	BTS-100K	
R9	22K		230104-78	BTS-22K	
R10	820Ω	1	230145-61	BTA-820	
R11	100K		230104-86	BTS-100K	
R12	470K		230104-94	BTS-470K	
R13	470K		230104-94	BTS-470K	
R14	680Ω		230104-60	BTS-680	
R15	680Ω		230104-60	BTS-680	
R16	33K		230104-80	BTS-33K	
R17	330K		230104-92	BTS-330K	
R18	3300Ω		230104-68	BTS-3300	Note 1
R19	820K		230104-97	BTS-820K	
R20	100K		230104-86	BTS-100K	
R21	8200Ω		230104-73	BTS-8200	
R22	5600Ω		230104-71	BTS-5600	
R23	10K		230104-74	BTS-10K	
R24	150Ω		230104-52	BTS-150	
R25	4700Ω	1	230105-70	BTA-4700	Note 2
R26	15K	2	230106-76	BTB-15K	
R27	100Ω		230104-50	BTS-100	
R28	15K	2	230106-76	BTB-15K	
R29	1200Ω	1	230145-63	BTA-1200	Note 3
R30	1Meg		230104-98	BTS-1Meg	
R31	4700Ω 5%		230094-175	BTS-4700 5%	
R32	1Meg		230104-98	BTS-1Meg	
R33	6800Ω 5%		230094-179	BTS-6800 5%	
R34	1000Ω		230104-62	BTS-1000	
R35	56Ω		230104-47	BTS-56	
R36	1000Ω		230104-62		
R37	12K 5%		230094-185		
R38	1000Ω		230104-62	BTS-1000	
R39	56Ω		230104-47	BTS-56	
R40	8200Ω 5%		230094-181	BTS-8200 5%	
R41	1000Ω		230104-62	BTS-1000	
R42	220Ω		230104-54	BTS-220	
R43	470Ω				
R44	470K		230104-94	BTS-470K	
R45	4300Ω	5	240073-1	1 3/4A-4500	
R46	270K		230104-91	BTS-270K	
R47	8200Ω	1	230105-73	BTA-8200	
R48	8200Ω	1	230105-73	BTA-8200	
R49	12K		230104-75	BTS-12K	
R50	220Ω		230104-54	BTS-220	
R51	560K		230104-95	BTS-560K	

Note 1. A 10K may be used in som
Note 2. Not used in some versions
Note 3. A 2200Ω, 2W used in BB
Note 4. Not used in BB chassis.
Note 5. A 100K used in BB chassis
Note 6. A 1.8Meg used in BB chas
Note 7. Negative temperature co
Note 8. A 150K used in some versi
Note 9. A 8500Ω, 5W used in BB c
Note 10. A 2700Ω used in BB chas

NIA)

	TYPE	NOTES
	6W6GT	Note 1
se Inv.	12AU7	
tput	6CM7	
	6AL5	Note 2
	6SN7GTB	
	6DQ6	Note 4
	6AX4GT	
	1B3GT	
	5U4G	Note 3

TES

YRAMID ART No.	SANGAMO PART No.	SPRAGUE PART No.
97	T-110	R2351 *
-350	MT-0550	
	T-602	R2348 *
	MT-4530	
-350	FM-4520	TVA-1608
	MT-4520 }	R2327 *
	MT-4520 }†	

d. for Paper
apacitors.

ATA		
MALLORY PART No.	SPRAGUE PART No.	NOTES
ZT-5515	5TCCB-V1	
UC-541	5GA-Q1	
UC-5347	5GA-T47	
UC-5347	5GA-T47	
ZT-5515	5TCCB-V1	
NT-5447	5TCU-Q47	
UC-541	5GA-Q1	
UC-5347	5GA-T47	
UC-5215	5GA-D15	
	5GA-T47	
UC-5415	5GA-Q15	
		Note 2
UC-5347	5GA-T47	Note 3
UC-531	5GA-T1	
UC-5347	5GA-T47	
UC-541	5GA-Q1	
UC-5347	5GA-T47	
UC-5347	5GA-T47	
UC-5215	5GA-D15	
ZT-5515	5TCCB-V1	Note 4
		Note 5
	5TCC-Q68	
	5GA-T8	
	5GA-T68	
	5GA-T47	
	5GA-T8	
DC511	5HK-S1	
GEM-201	2TM-P1	
GEM-201	2TM-P1	
GEM-4147	4TM-S47	
	5TCCB-V22	
	5TCU-Q68	
UC-5240	5GA-D39	
DC525	5HK-D5	
UC-5347	5GA-T47	
DC511	5HK-S1	Note 6
		Note 6
DC511	5HK-S1	
DC511	5HK-S1	
GEM-2147	2TM-S47	
DC511	5HK-S1	
NT-531	5TCU-T1	
GEM-6247	6TM-D47	
GEM-2022	2TM-P22	
GEM-201	2TM-P1	
GEM-4222	4TM-D22	
UC-5315	5GA-T15	
GEM-401	4TM-P1	
DC525	5HK-D5	
GEM-4127	4TM-S27	
GEM-401	4TM-P1	

PARTS LIST AND DESCRIPTIONS

CAPACITORS (cont)

ITEM No.	RATING CAP.	RATING VOLT	REPLACEMENT DATA MAGNAVOX PART No.	AEROVOX PART No.	CENTRALAB PART No.	CORNELL-DUBILIER PART No.	ERIE PART No.	MALLORY PART No.	SPRAGUE PART No.	NOTES
C68	.0047	400	250212-4	BPD-05	DD-472	CUB4D47	GP-4700	GEM-4247	4TM-D47	
C69	.047	200	250212-5	BPD-05	DF-503	CUB2S47		GEM-2147	2TM-S47	
C70	1000		250218-8	BPD-001	DD-102	BYA6D1	ED-1000	DC521	5HK-D1	
C71	360		250229-343	1464-00036		1R5T36			MS-336	
C72	3900		250229-468	1464-0039		5R5D39			MS-239	
C73	470		250229-346	1464-00047		1R5T47			MS-347	
C74	1000		250218-8			L10D1	ED-1000	DC521	5HK-D1	
C75	.047	400	250211-11	BPD-05	DF-503	CUB4S47		GEM-4147	4TM-S47	
C76	.047	400	250211-11	BPD-05	DF-503	CUB4S47		GEM-4147	4TM-S47	
C77	47	4000	250175-32							
C78	.1	600	250201-13		DF-104	CUB6P1		GEM-601	6TM-P1	
C79	680		250218-4	BPD-00068	DD-681	BYA10T68	ED-680	UC-5368	5GA-T68	
C80	470		250218-6		D6-471	L10T47			5GA-T47	
C81A	10000 }		250219-3	BPD-2X01	DDM2-103	BYD6DS1	{GP-10000	DC511 }	5HK-2S1	
B	10000 }						{GP-10000	DC511 }		
C82	.1	400	250211-13	P488N-1	DF-104	CUB4P1			4TM-P1	Note 7

Note 2. Some versions may use a 6.8MMF in this application (Part #220221-125).
Note 3. Some versions may use a 27MMF in this application.
Note 4. Not used in some versions.
Note 5. Some versions may use a .56MMF in this application.
Note 6. Not used in chassis ending in BB.
Note 7. A 20000MMF used in chassis ending in BB.

CONTROLS

ITEM No.	RATING RESISTANCE	RATING WATTS	REPLACEMENT DATA MAGNAVOX PART No.	CENTRALAB PART No.	CLAROSTAT PART No.	IRC PART No.	MALLORY PART No.	INSTALLATION NOTES
R1A	1Meg	½	220126-46	AB-70	A47-1Meg-Z	Q13-137	U53	Volume - Note 1
B	Shaft			AK-3	FS-3	Not Req.	Not Req.	
C	Switch			KB-1	SWE-12	76-1	US-26	
R2A	1000Ω	½	220126-50					Contrast - Note 2
B	Shaft							
R3A	1.25Meg	½	220132-3	BX-742	A47-1.5Meg -S	Q11-138	TA155L	Vert. Hold
B	Shaft			Not Req.	FKS-1/4	Not Req.	Not Req.	
R4A	200K	½	220132-2	BX-46	A47-200K-S	Q11-129	U-43	Brightness
B	Shaft			Not Req.	FKS-1/4	Not Req.	Not Req.	
R5A	50K	½	220132-1	BX-31	A47-50K-S	Q11-123	TA54L	Horiz. Hold
B	Shaft			Not Req.	FKS-1/4	Not Req.	Not Req.	
R6A	2.5Meg	½	220146-2	AB-83	A47-2.5Meg -S	Q11-239	TA255L	Vert. Height
B	Shaft			AK-1	FKS-1/4	Not Req.	Not Req.	
R7	3000Ω	1	220120-3				FL-4K	Vert. Lin. -wire wound

Note 1. An alternate 250K control part #220135-2 used in chassis ending in BB.
Note 2. An alternate 600Ω control part #220126-56 used in chassis ending in BB.

RESISTORS

All wattages 1/2 watt, or less, unless otherwise listed.

ITEM No.	RATING OHMS	RATING WATT	REPLACEMENT DATA MAGNAVOX PART No.	IRC PART No.	NOTES
R8	100K		230104-86	BTS-100K	
R9	22K		230104-78	BTS-22K	
R10	820Ω	1	230145-61	BTA-820	
R11	100K		230104-86	BTS-100K	
R12	470K		230104-94	BTS-470K	
R13	470K		230104-94	BTS-470K	
R14	680Ω		230104-60	BTS-680	
R15	680Ω		230104-60	BTS-680	
R16	33K		230104-80	BTS-33K	
R17	330K		230104-92	BTS-330K	
R18	3300Ω		230104-68	BTS-3300	Note 1
R19	820K		230104-97	BTS-820K	
R20	100K		230104-86	BTS-100K	
R21	8200Ω		230104-73	BTS-8200	
R22	5600Ω		230104-71	BTS-5600	
R23	10K		230104-74	BTS-10K	
R24	150Ω		230104-52	BTS-150	
R25	4700Ω	1	230105-70	BTA-4700	Note 2
R26	15K	2	230106-76	BTB-15K	
R27	100Ω		230104-50	BTS-100	
R28	15K	2	230106-76	BTB-15K	
R29	1200Ω	1	230145-63	BTA-1200	Note 3
R30	1Meg		230104-98	BTS-1Meg	
R31	4700Ω 5%		230094-175	BTS-4700 5%	
R32	1Meg		230104-98	BTS-1Meg	
R33	6800Ω 5%		230094-179	BTS-6800 5%	
R34	1000Ω		230104-62	BTS-1000	
R35	56Ω		230104-47	BTS-56	
R36	1000Ω		230104-62		
R37	12K 5%		230094-185		
R38	1000Ω		230104-62	BTS-1000	
R39	56Ω		230104-47	BTS-56	
R40	8200Ω 5%		230094-181	BTS-8200 5%	
R41	1000Ω		230104-62	BTS-1000	
R42	220Ω		230104-54	BTS-220	
R43	470Ω				
R44	470K		230104-94	BTS-470K	
R45	4300Ω	5	240073-1	1 3/4A-4500	
R46	270K		230104-91	BTS-270K	
R47	8200Ω	1	230105-73	BTA-8200	
R48	8200Ω	1	230105-73	BTA-8200	
R49	12K		230104-75	BTS-12K	
R50	220Ω		230104-54	BTS-220	
R51	560K		230104-95	BTS-560K	

ITEM No.	RATING OHMS	RATING WATT	REPLACEMENT DATA MAGNAVOX PART No.	IRC PART No.	NOTES
R52	6800Ω		230104-72	BTS-6800	
R53	680Ω		230104-60	BTS-680	
R54	270K		230104-91	BTS-270K	Note 4
R55	1.2Meg 5%		230094-233	BTS-1.2Meg 5%	
R56	1Meg 5%		230094-231	BTS-1Meg 5%	
R57	1Meg		230104-98	BTS-1Meg	
R58	3300Ω	1	230105-68	BTA-3300	
R59	270Ω	2	230106-55	BTB-270	
R60	10K		230104-74	BTS-10K	
R61	470K		230104-94	BTS-470K	
R62	4.7Meg		230104-106	BTS-4.7Meg	
R63	1Meg		230104-98	BTS-1Meg	
R64	1Meg		230104-98	BTS-1Meg	
R65	22K		230104-78	BTS-22K	
R66	3300Ω 5%		230094-171	BTS-3300 5%	
R67	22K		230104-78	BTS-22K	Note 5
R68	3300Ω 5%		230094-171	BTS-3300 5%	
R69	1.2Meg		230104-98	BTS-1.2Meg	Note 6
R70	22K		230104-78	BTS-22K	
R71			230130-2		Note 7
R72	1Meg	1	230105-98	BTA-1Meg	
R73	11K 5%		230094-184	BTS-11K 5%	
R74	1000Ω		230104-62	BTS-1000	
R75	300Ω 5%		230094-146		
R76	300Ω 5%		230094-146		
R77	100K		230104-86	BTS-100K	
R78	100K		230104-86	BTS-100K	
R79	470K		230104-94		
R80	4.7Meg		230104-106		
R81	6800Ω 5%		230094-179	BTS-6800 5%	
R82	1300Ω 5%		230094-162		
R83	100K 5%		230094-207		
R84	120K 5%		230094-209	BTS-120K 5%	Note 8
R85	12K		230104-75		
R86	470K		230104-94		
R87	12K 5%	5	240071-14	1 3/4A-12K	Note 9
R88	18Ω	2	230106-41		
R89	6800Ω		230104-72	BTS-6800	Note 10
R90	3.9Ω	1	230107-3	BW1-3.9	
R91	1500Ω	1	230105-64	BTA-1500	
R92	680Ω		230104-60	BTS-680	
R93	120K		230110-1	BTS-120K	

Note 1. A 10K may be used in some versions.
Note 2. Not used in some versions.
Note 3. A 2200Ω, 2W used in BB chassis (Part #230106-66).
Note 4. Not used in BB chassis.
Note 5. A 100K used in BB chassis (part #230104-86).
Note 6. A 1.8Meg used in BB chassis (part #230104-10).
Note 7. Negative temperature coefficient resistor. Approximately 800K cold.
Note 8. A 150K used in some versions (Part #230094-211).
Note 9. A 8500Ω, 5W used in BB chassis (Part #270071-25).
Note 10. A 2700Ω used in BB chassis (Part #230104-67).

ITEM No.	RATING PRI.	RATING SEC. 1	RATING SEC. 2
T1	117VAC @1.66A	575VCT @.250A	5V @ 3A

① Used in Chassis ending in AA.
② Used in Chassis ending in BB
③ Fabricate mounting.
④ Use original mounting bracke
⑤ Parallel and phase 6.3V filan
⑥ Parallel and phase 6.3V @ 5
⑦ Tape low high voltage winding
⑧ Tape 6.3V @1.2A winding.

ITEM No.	USE	MAG PAR
T2	Vert. Osc. Trans.	32026
T3	Horiz. Output Trans.	36062
T4	Vert. Output Trans.	32026
T5A	Yoke(90°)Horiz. (21MH)	36061
B	Vert. (45MH)	36061
T6	Width Coil	36065

① Chassis ending in BB use Magn
② Cut and tape blanking lead.
③ Drill new mounting hole(s).
④ Connect as auto transformer.
⑤ Yoke rear cover.
⑥ Use original yoke damping net
⑦ Chassis ending with BB use M
⑧ Use terminals #1 and #2.
⑨ Use black and white terminals.
⑩ Use terminals C and E.
⑪ Use plain terminals.
⑫ Use original mounting bracket
⑬ Use coil (L1).
⑭ Use red and blue terminals.
§This part may be superceded by I

*HORI

	ORIGINAL TERMINAL CONNECTIONS	Halldorso Replacem Connectio
	8	
	5	
	3	
	4	
	2	
	1	
Connect Width Coil Across →	1 & 2	
Special Notes →		

⑮ If insufficient

TR

ITEM No.	IMPEDANCE PRI.	IMPEDANCE SEC.	MAGNAVOX PART No.
T7	2000Ω	3-4Ω	320251-1 ① 320251-2 ②

① Used in chassis ending in AA
② Used in chassis ending in BB
③ Drill one new mounting hole.

ITEM No.	USE	MAGNAVOX PART No.
L1	RF Choke	360574-30
L2	RF Choke	360574-30
L3	Fil. Choke	360574-8
L4	Fil. Choke	360574-8

ITEM No.	USE	M
L9	1st. Video IF	3606
L10	2nd. Video IF	3606
L11	3rd. Video IF	3606
L12	Shunt Peaking Coil	3606
L13	Series Peaking Coil	3606
L14	Shunt Peaking Coil	3606
L15	1st. Sound IF	3606
L16	2nd. Sound IF	3606
L17	Quadrature Coil	3606
L18	Fil. Choke	3606
L19	RF Choke	3605
L20	Fil. Choke	3606
L21	RF Choke	3606

* Parallel with 39K resistor.

DESCRIPTIONS

ORS (cont)

CORNELL-DUBILIER PART No.	ERIE PART No.	MALLORY PART No.	SPRAGUE PART No.	NOTES
CUB4D47	GP-4700	GEM-4247	4TM-D47	
CUB2S47		GEM-2147	2TM-S47	
BYA6D1	ED-1000	DC521	5HK-D1	
R5T36			MS-336	
R5D39			MS-239	
R5T47			MS-347	
L10D1	ED-1000	DC521	5HK-D1	
CUB4S47		GEM-4147	4TM-S47	
CUB4S47		GEM-4147	4TM-S47	
CUB6P1		GEM-601	6TM-P1	
BYA10T68	ED-680	UC-5368	5GA-T68	
L10T47			5GA-T47	
BYD6DS1	GP-10000	DC511	5HK-S1	
	GP-10000	DC511		
CUB4P1			4TM-P1	Note 7

Part #22022l-125).

OLS

ATA IRC PART No.	MALLORY PART No.	INSTALLATION NOTES
Q13-137	U53	Volume - Note 1
Not Req.	Not Req.	
76-1	US-26	
		Contrast - Note 2
Q11-138	TA155L	Vert. Hold
Not Req.	Not Req.	
Q11-129	U-43	Brightness
Not Req.	Not Req.	
Q11-123	TA54L	Horiz. Hold
Not Req.	Not Req.	
Q11-239	TA255L	Vert. Height
Not Req.	Not Req.	
	FL-4K	Vert. Lin. -wire wound

ending in BB.

is ending in BB.

RS

less otherwise listed.

ITEM No.	RATING OHMS	RATING WATT	REPLACEMENT DATA MAGNAVOX PART No.	REPLACEMENT DATA IRC PART No.	NOTES
R52	6800Ω		230104-72	BTS-6800	
R53	680Ω		230104-60	BTS-680	
R54	270K		230104-91	BTS-270K	Note 4
R55	1.2Meg 5%		230094-233	BTS-1.2Meg 5%	
R56	1Meg 5%		230094-231	BTS-1Meg 5%	
R57	1Meg		230104-98	BTS-1Meg	
R58	3300Ω	1	230105-68	BTA-3300	
R59	270Ω	2	230106-55	BTB-270	
R60	10K		230104-74	BTS-10K	
R61	470K		230104-94	BTS-470K	
R62	4.7Meg		230104-106	BTS-4.7Meg	
R63	1Meg		230104-98	BTS-1Meg	
R64	1Meg		230104-98	BTS-1Meg	
R65	22K		230104-78	BTS-22K	
R66	3300Ω 5%		230094-171	BTS-3300 5%	
R67	22K		230104-78	BTS-22K	Note 5
R68	3300Ω 5%		230094-171	BTS-3300 5%	
R69	1.2Meg		230104-98	BTS-1.2Meg	Note 6
R70	22K		230104-78	BTS-22K	
R71			230130-2		Note 7
R72	1Meg	1	230105-98	BTA-1Meg	
R73	11K 5%		230094-184	BTS-11K 5%	
R74	1000Ω		230104-62	BTS-1000	
R75	300Ω 5%		230094-146		
R76	300Ω 5%		230094-146		
R77	100K		230104-86	BTS-100K	
R78	100K		230104-86	BTS-100K	
R79	470K		230104-94		
R80	4.7Meg		230104-106		
R81	6800Ω 5%		230094-179	BTS-6800 5%	
R82	1300Ω 5%		230094-162		
R83	100K 5%		230094-207		
R84	120K 5%		230094-209	BTS-120K 5%	Note 8
R85	12K		230104-75		
R86	470K		230104-94		
R87	12K 5%	5	240071-14	1 3/4A-12K	Note 9
R88	18Ω	2	230106-41		
R89	6800Ω		230104-72	BTS-6800	Note 10
R90	3.9Ω	1	230107-3	BW1-3.9	
R91	1500Ω	1	230105-64	BTA-1500	
R92	680Ω		230104-60	BTS-680	
R93	120K		230110-1	BTS-120K	

sions.

is (Part #230106-66).

t #230104-86).
art #230104-10).
ent resistor. Approximately 800K cold.
Part #230094-211).
(Part #270071-25).
art #230104-67).

TRANSFORMER (POWER)

ITEM No.	RATING PRI.	RATING SEC. 1	RATING SEC. 2	RATING SEC. 3	REPLACEMENT DATA MAGNAVOX PART No.	Halldorson PART No.	Merit PART No.	Stancor PART No.	Thordarson PART No.	Triad PART No.
T1	117VAC @1.66A	575VCT @.250A	5V @ 3A	6.3V @9.5A	300077-1 ① 300093-1 ②	P9733 ③	P-3077③	P-8335 ④ ⑤	26R33 ③ ⑥⑦	R-52BC ③⑥ ⑧

① Used in Chassis ending in AA.
② Used in Chassis ending in BB.
③ Fabricate mounting.
④ Use original mounting bracket.
⑤ Parallel and phase 6.3V filament windings.
⑥ Parallel and phase 6.3V @ 5A windings.
⑦ Tape low high voltage winding, Tape 5V @ 3A winding.
⑧ Tape 6.3V @1.2A winding.

TRANSFORMERS (SWEEP CIRCUITS)

ITEM No.	USE	MAGNAVOX PART No.	Halldorson PART No.	Merit PART No.	RCA TYPE No.	Ram PART No.	Stancor PART No.	Thordarson PART No.	Triad PART No.
T2	Vert. Osc. Trans.	320262-1							
T3	Horiz. Output Trans.	360623-1 ①					A-8295 *	FLY-79 * §	
T4	Vert. Output Trans.	320263-1	Z1807 ②	A-2824 ②		V315 ②	A-8141 ③	26S54 ③	A-109X③ ④
T5A	Yoke(90°)Horiz. (21MH)	360617-1 360619-1⑤	DF607 ⑥	MDF-92⑥	235D1⑥	Y90F19/43 ⑥	DY-16A⑥	Y-16 ⑥	Y-41-1⑥
B T6	Vert. (45MH) Width Coil	360652-1 ⑦	RF800③⑧	MWC-10 ③⑨	214R1 ③ ⑩	201R3A③	WC-10③ ⑪	WC-24 ⑫ ⑬	WC-11 ③⑭

① Chassis ending in BB use Magnavox part #360700-1.
② Cut and tape blanking lead.
③ Drill new mounting hole(s).
④ Connect as auto transformer.
⑤ Yoke rear cover.
⑥ Use original yoke damping network.
⑦ Chassis ending with BB use Magnavox part #360699-1.
⑧ Use terminals #1 and #2.
⑨ Use black and white terminals.
⑩ Use terminals C and E.
⑪ Use plain terminals.
⑫ Use original mounting bracket.
⑬ Use coil (L1).
⑭ Use red and blue terminals.
§This part may be superceded by Parts Manufacturer's introduction of special unit for this application.

*HORIZONTAL OUTPUT TRANSFORMER CONNECTION DATA

Use Original Width Coil Unless Replacement Type Is Listed

	ORIGINAL TERMINAL CONNECTIONS	Halldorson Replacement Connections	Merit Replacement Connections	RCA Replacement Connections	Ram Replacement Connections	Stancor Replacement Connections	Thordarson Replacement Connections	Triad Replacement Connections
	8					8	8	
	5					5	6	
	3					3	3	
	4					4	2	
	2					2	2	
	1					1	1	
Connect Width Coil Across →	1 & 2					1 & 2	1 & 2	
Special Notes →							⑮	

⑮ If insufficient width, add capacity (approx. 50-100MMF @ 4KV) across horizontal yoke.

TRANSFORMER (AUDIO OUTPUT)

ITEM No.	IMPEDANCE PRI.	IMPEDANCE SEC.	REPLACEMENT DATA MAGNAVOX PART No.	Halldorson PART No.	Merit PART No.	Stancor PART No.	Thordarson PART No.	Triad PART No.	NOTES
T7	2000Ω	3-4Ω	320251-1 ① 320251-2 ②	Z1101	A-2928 ③	A-3332	24S50 ③	S-2X ③	

① Used in chassis ending in AA.
② Used in chassis ending in BB.
③ Drill one new mounting hole.

COILS (RF-IF)

ITEM No.	USE	MAGNAVOX PART No.	NOTES
L1	RF Choke	360574-30	
L2	RF Choke	360574-30	
L3	Fil. Choke	360574-8	
L4	Fil. Choke	360574-8	
L5	Cath. Choke	360522-7	
L6	RF Choke	360574-8	
L7	UHF IF Output	360574-50	
L8	UHF IF Output	360574-12	

ITEM No.	USE	REPLACEMENT DATA MAGNAVOX PART No.	MEISSNER PART No.	MERIT PART No.	MILLER PART No.	NOTES
L9	1st. Video IF	360640-1		TV-131	6225	
L10	2nd. Video IF	360636-1	17-4522	TV-130	6219	
L11	3rd. Video IF	360637-1	17-5003	TV-128	6233	Includes 47.25MC trap
L12	Shunt Peaking Coil	360622-10	19-3660		6146	600 Microhenries
L13	Series Peaking Coil	360622-15	19-3250 *	TV-185 *	6181 *	225 Microhenries, wound on 39K resistor
L14	Shunt Peaking Coil	360622-16	19-3300	TV-185	6130	275 Microhenries
L15	1st. Sound IF	360657-1				
L16	2nd. Sound IF	360650-1				
L17	Quadrature Coil	360651-1				
L18	Fil. Choke	360601-3			4602	1 Microhenries, IRC part #CLA
L19	RF Choke	360574-8	19-1000		4602	1.1 Microhenries
L20	Fil. Choke	360601-1				.47 Microhenry, IRC part #CLA
L21	RF Choke	360601-1				.47 Microhenry, IRC part #CLA

* Parallel with 39K resistor.

PARTS LIST AND DESCRIPTIONS (Continued)

TRANSFORMER (HORIZ. OSC.)

ITEM No.	DC RES.		REPLACEMENT DATA							NOTES
	PRI.	SEC.	MAGNAVOX PART No.	MEISSNER PART No.	MERIT PART No.	MILLER PART No.	RCA TYPE No.	Ram PART No.	Thordarson PART No.	
L22	60Ω		360579-1						HS-7	22-78 Millihenries

FILTER CHOKE

ITEM No.	RATINGS			REPLACEMENT DATA					
	TOTAL DIRECT CURRENT	D. C. RESISTANCE	INDUCTANCE (0 CURRENT 1000 ∿)	MAGNAVOX PART No.	Halldorson PART No.	Merit PART No.	Stancor PART No.	Thordarson PART No.	Triad PART No.
L23	.250A	37Ω	.45 HY.	320058-3 ①	C5040 ②	C-2974 ②	C-2326②	26C44②	C-23X ②

① Alternate part #320058-2.
② Drill one new mounting hole.

COMPONENT COMBINATIONS

ITEM No.	USE	DESCRIPTION		MAGNAVOX PART No.	REPLACEMENT DATA	
K1	Vertical Integrator	2000MMF 5000MMF 5000MMF	8200Ω 8200Ω 22K	250186-1	Aerovox Centralab Cornell-Dubilier Sprague	PA110 PC100 115TM1 V-1

FUSES

ITEM No.	TYPE	RATING	REPLACEMENT DATA					
			MAGNAVOX PART No.		LITTELFUSE PART No.		BUSS PART No.	
			FUSE	HOLDER	FUSE	HOLDER	FUSE	HOLDER
M1	3AG	1/4A 250V S/B	180157-30		313.250 (3AG 1/4A S/B)	357001	MDL 1/4	4405

CRYSTAL DIODES

ITEM No.	ORIG. TYPE	REPLACEMENT DATA		NOTES
		MAGNAVOX PART No.	SYLVANIA PART No.	
M2	1N82A	530036-1	1N82A	UHF Mixer (Clip in)
M3	1N64		1N60	Video Detector (Pigtail)

MISCELLANEOUS

ITEM No.	PART NAME	MAGNAVOX PART No.	NOTES
M4	Tuner	700530-2	UHF
M5	Tuner	700541-2	VHF
M6	Video Det. Assy.	360638-1	Includes trans., coil, 470Ω resistor, 10MMF Cap., and diode M3.
M7	Switch	160247-1	UHF/VHF change-over
M8	Switch	160263-2	Local-distant (DPDT)
M9	Centering Device		
M10	Ion Trap	360492-5	

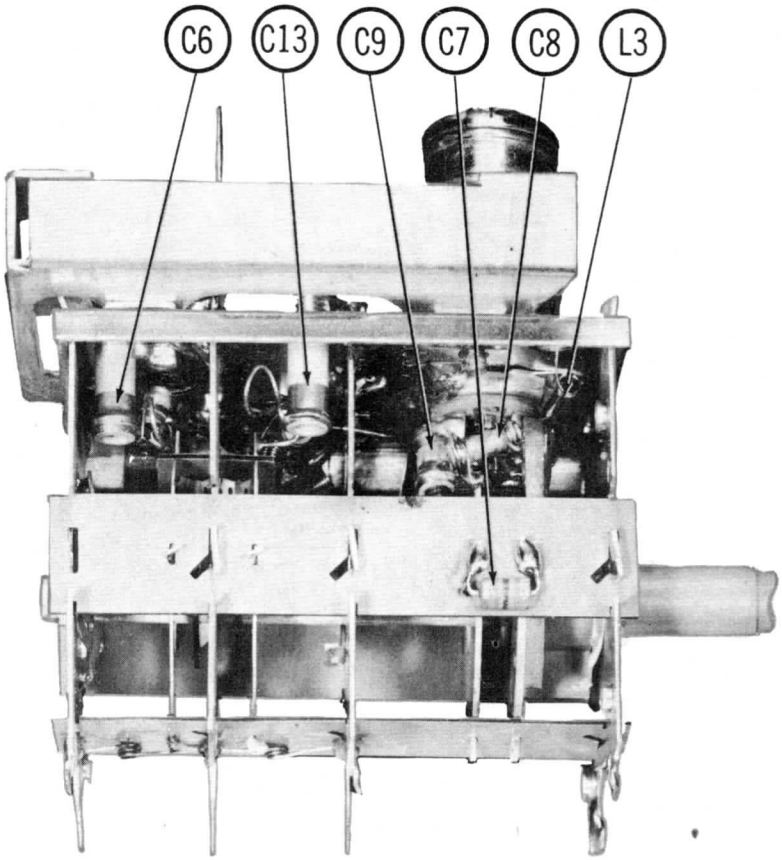

UHF TUNER-LEFT SIDE

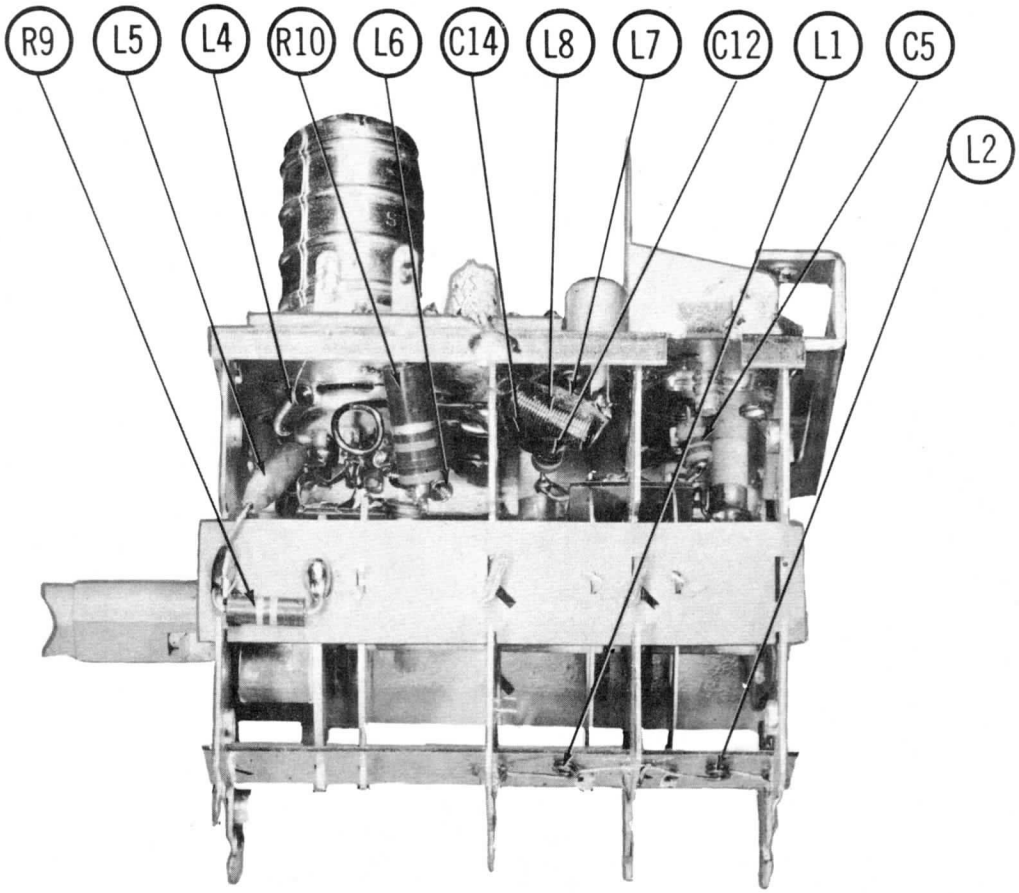

UHF TUNER-RIGHT SIDE

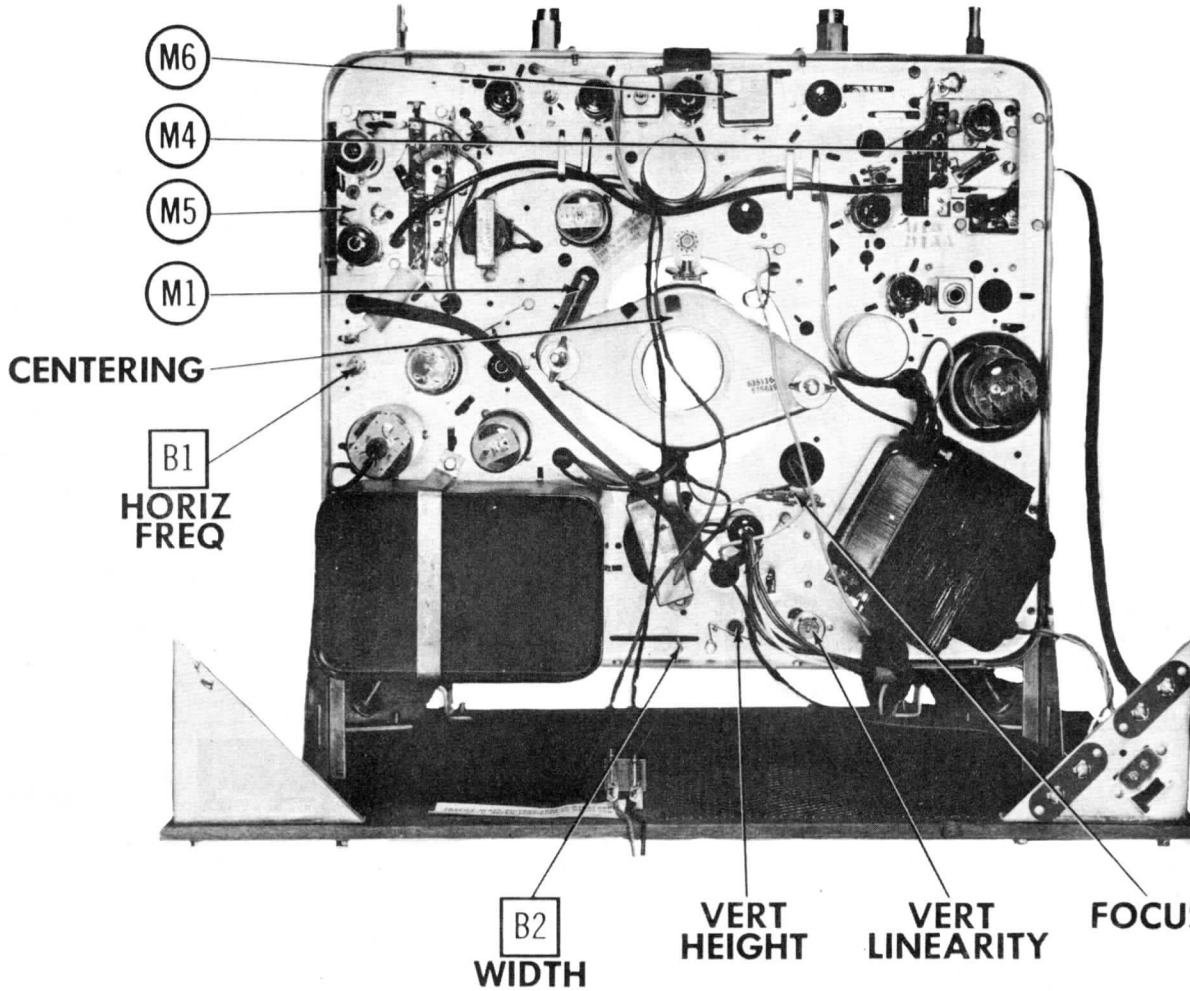

CABINET—REAR VIEW

HORIZONTAL SWEEP CIRCUIT ADJUSTMENTS

Turn the set on and tune in a TV station, preferably with a test pattern.

Set the horizontal hold control at the center of its range. Turn the horizontal frequency slug (Bl) slowly clockwise while switching off station and back until the picture just loses sync. Turn Bl slowly counter clockwise until the picture just falls back in sync and then continue to turn counter clockwise $\frac{1}{2}$ turn.

The picture should hold sync at both extreme ends of the horizontal hold control. If necessary, readjust Bl SLIGHTLY and test for sync pull-in as above.

Adjust the width slug (B2) for a picture SLIGHTLY wider than necessary to fill the picture mask horizontally.