PHOTOFACT* Folder

*TRADE MARK

RCA MODELS 630TS, 630CTS, 8TS30

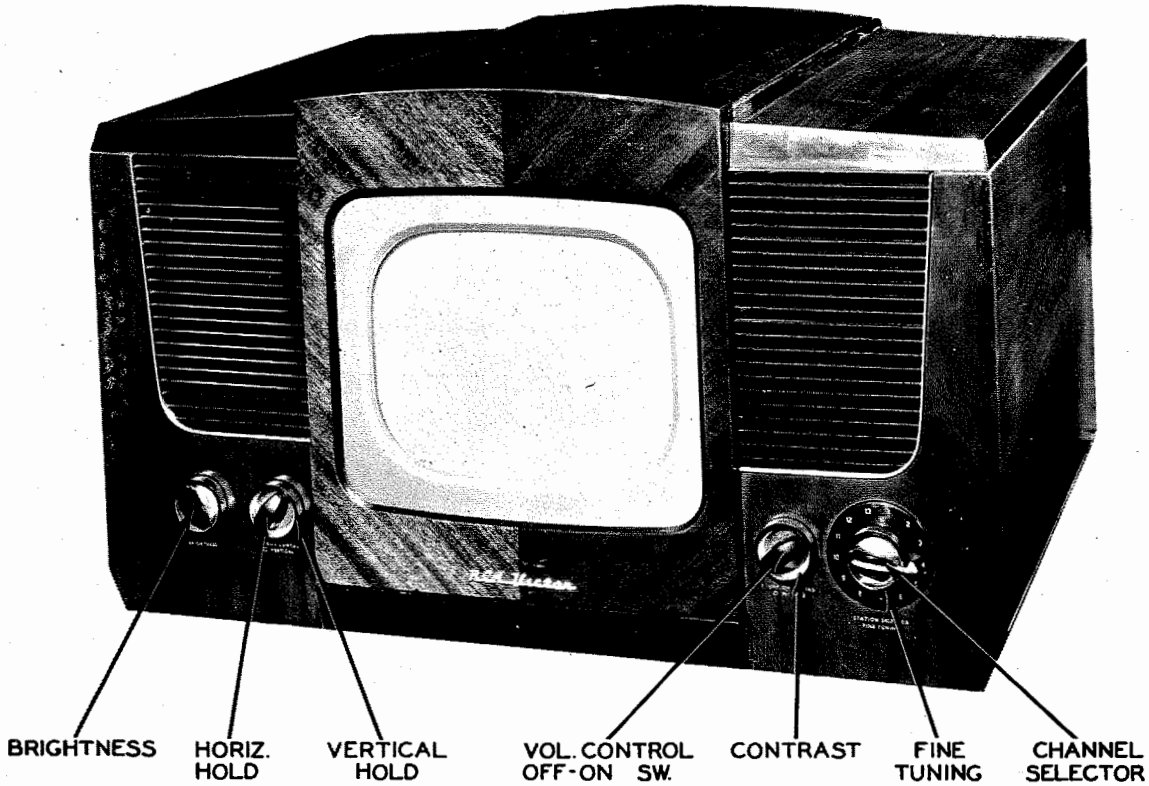

RCA MODELS 630TS, 630CTS, 8TS30

RCA (VICTOR) MODEL 8TS30

TRADE NAME	RCA, Models 630TS, 630TCS, 8TS30		
MANUFACTURER	RCA Victor Div., Radio Corp. of America, Camden, N. J.		
TYPE SET	Television Receiver		
TUBES	Thirty		
POWER SUPPLY	115 Volts 60 Cycle AC	RATING	2.5 Amps. @ 117 Volts AC
TUNING RANGE—	Channels 1 through 13		

TABLE OF CONTENTS

HOWARD W. SAMS & CO., INC. • Indianapolis 7, Indiana

DATE 1/49-#492-18 SET #54-FOLDER #18

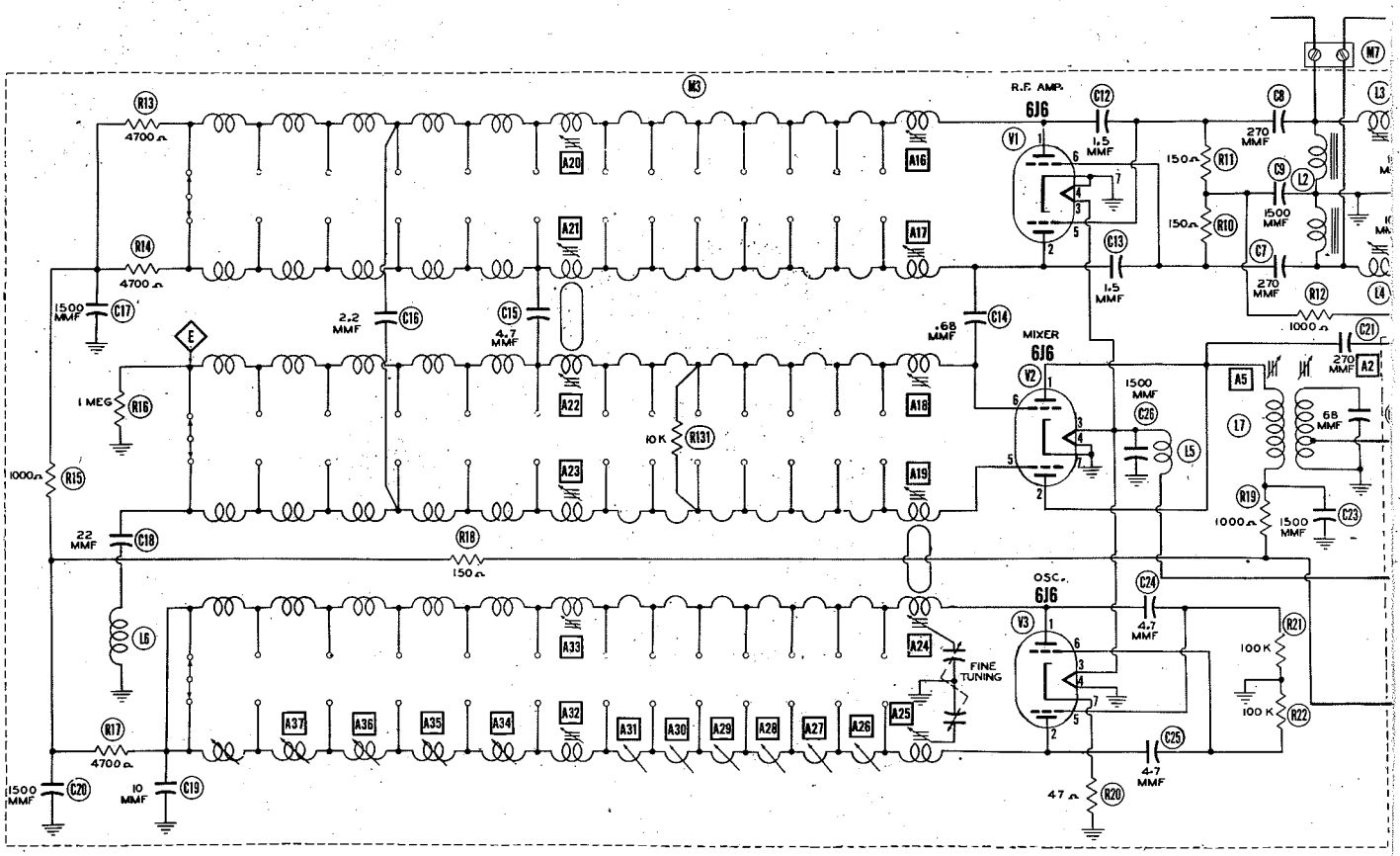
R.F. AMP.
6J6
MIXER
6J6
OSC.
6J6
FINE TUNING
4700 Ω
1 MEG
1000 Ω
150 Ω
10 K
1.5 MMF
270 MMF
1500 MMF
2.2 MMF
4.7 MMF
.68 MMF
22 MMF
10 MMF
68 MMF
100 K
47 Ω

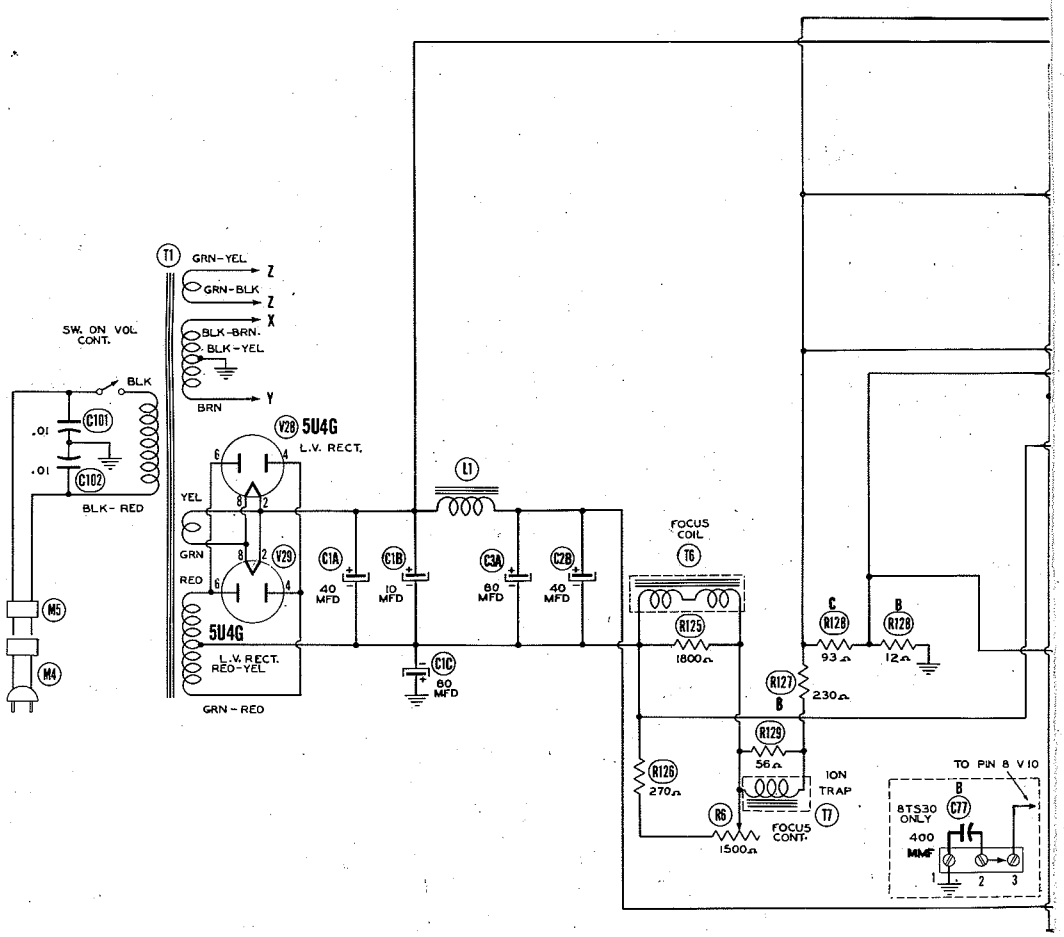
GRN-YEL
GRN-BLK
BLK-BRN
BLK-YEL
BRN
SW. ON VOL CONT.
BLK
BLK-RED
5U4G
L.V. RECT.
YEL
GRN
RED
RED-YEL
GRN-RED
40 MFD
10 MFD
60 MFD
FOCUS COIL
1800 Ω
93 Ω
12 Ω
230 Ω
56 Ω
270 Ω
1500 Ω
ION TRAP
FOCUS CONT.
TO PIN 8 V10
8TS30 ONLY
400 MMF

RCA MODELS 630TS, 630CTS, 8TS30

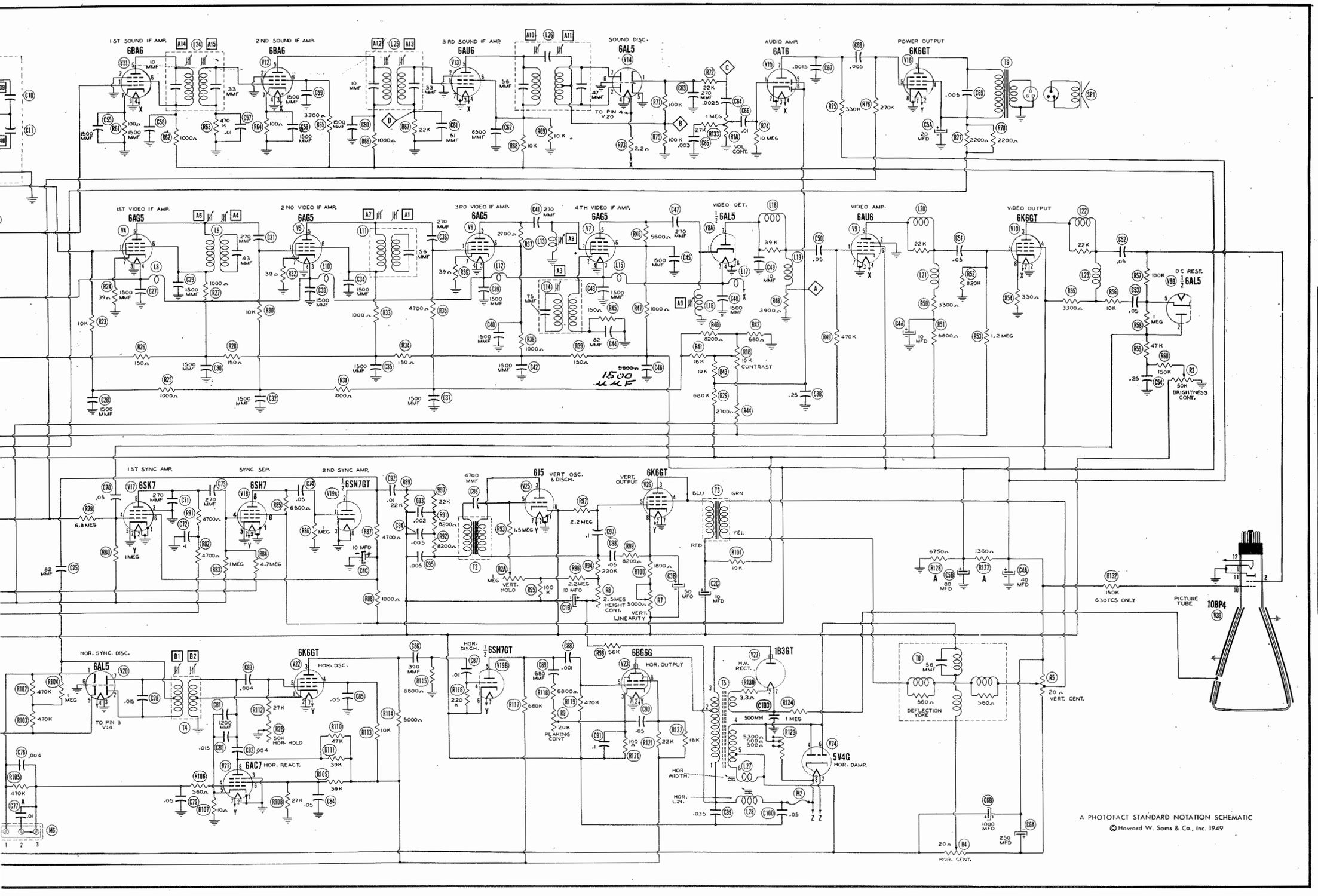

A PHOTOFACT STANDARD NOTATION SCHEMATIC

DISASSEMBLY INSTRUCTIONS

1. Remove nine screws from back panel and remove panel.
2. Remove two screws holding top center of cabinet and remove.
3. Remove two Phillips screws from front safety glass panel and remove panel.
4. Loosen two top sliding brackets that hold picture tube in place.
5. Remove picture tube socket, high voltage lead and ion trap and carefully slide picture tube out the front.
6. Remove eight push-on type control knobs.
7. Unplug speaker.
8. Remove five chassis bolts from bottom of cabinet and slide chassis out rear of cabinet.
9. Remove four nuts, washers and lock washers from speaker and remove speaker.

HORIZONTAL OSCILLATOR ALIGNMENT

HORIZONTAL OSCILLATOR ALIGNMENT CHECK:

The sync. link must be in the normal position (2 to 3). After turning the horizontal hold control to the maximum counter clockwise position, the picture should remain in horizontal sync. Remove the picture momentarily by turning the contrast control fully counter-clockwise and then return it to the normal operating position. This should pull the picture back into synchronization.

Now turn the horizontal hold control fully clockwise. The picture should remain in sync. Momentarily remove the signal and again the picture should pull into sync. if receiver is functioning properly.

If the receiver functions properly under these checks it is not necessary to align the horizontal oscillator circuit. However, if the picture is not normal or stable the horizontal oscillator must be aligned.

SLIGHT RETOUCH ALIGNMENT:

If the receiver failed in the above check to hold sync. at either extreme of the hold control or after momentary removal of the signal, it may be possible to align the horizontal oscillator by making slight adjustments. If this fails it will be necessary to completely re-align the horizontal oscillator circuit.

Tune in a TV station and adjust tuning for best sound quality. Sync. the picture and adjust the contrast control to slightly less than normal position. Turn the horizontal hold control to the point where the horizontal oscillator fails to hold or pull in. Remove signal. Turn B2 frequency adjustment (located at rear of chassis) until oscillator pulls into sync. Now check the pull-in and hold for the other extreme of the horizontal hold control.

COMPLETE ALIGNMENT:

Tune in a TV station for the best sound quality. Adjust vertical hold control to vertically sync. the picture and adjust the contrast control to slightly less than normal. Turn B2 frequency adjustment until picture syncs. horizontally. If blanking bar is present on picture adjust B1 (phasing adjust screw) until blanking bar moves to the right and off the raster. If ripples occur in the raster turn B1 in a clockwise direction until the unstable condition is removed. The length of this adjustment screw in its correct position is usually about 1/2 inch beyond the bushing.

Turn horizontal hold control fully counter-clockwise and adjust B2 until picture fails to sync. Now slowly turn B2 to the point where the picture syncs. again. Readjust B1 so that the left side of picture is close to the left side of the raster but does not fold over.

Turn horizontal hold fully clockwise. Right side of picture should be close to right side of raster but does not fold over. If picture does fold over, readjust B1.

When signal is restored after momentary removal of the signal, the picture should fall into sync. If picture fails to fall into sync. turn B2 counter-clockwise until picture syncs. in.

Turn horizontal hold fully counter-clockwise. Picture should fall back into sync. after momentary removal of signal.

If picture fails to pull in sync. after momentary removals of the signal in both extremes of the horizontal hold control, there may not be a sufficient pull-in range, though not necessarily. A pull-in of 3/4 of the hold control range should be satisfactory.

Excessive pull-in is objectionable because high control circuit sensitivity gives greater reaction to noise pulses. This may also affect the vertical sync. and equalizing pulses which tend to cause a bend in the top portion of the raster.

This condition is more noticeable in the 1 to 2 position of the sync. link on models 630TS and 630TCS.

HORIZONTAL LINEARITY ADJUSTMENT

Turn horizontal peaking control R9 clockwise as far as possible without crowding right side of picture. This position provides maximum voltage to picture tube second anode. Adjust width control until raster fills the mask horizontally (8½ inches). Adjust horizontal linearity control until picture is symmetrical left and right. (It may be necessary to slightly readjust horizontal peaking control). Adjust horizontal centering to center of raster.

If continued adjustments of the peaking, width and linearity controls fail to give proper linearity, it may necessitate moving the tap on R123 which is located in the high voltage compartment. After this tap has been moved, it will be necessary to readjust the peaking, width and linearity controls.

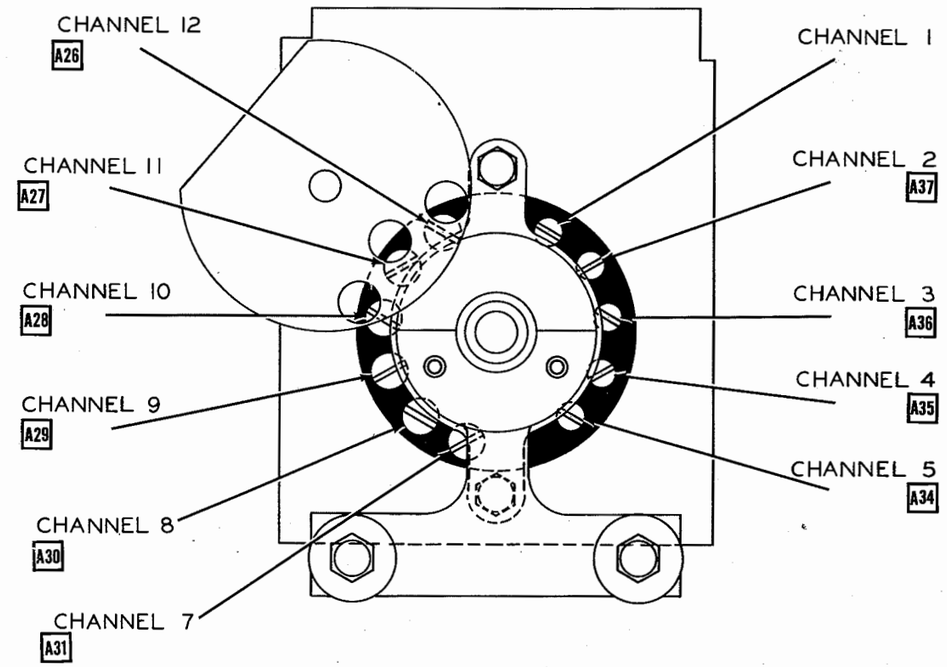

RF OSCILLATOR ALIGNMENT POINTS

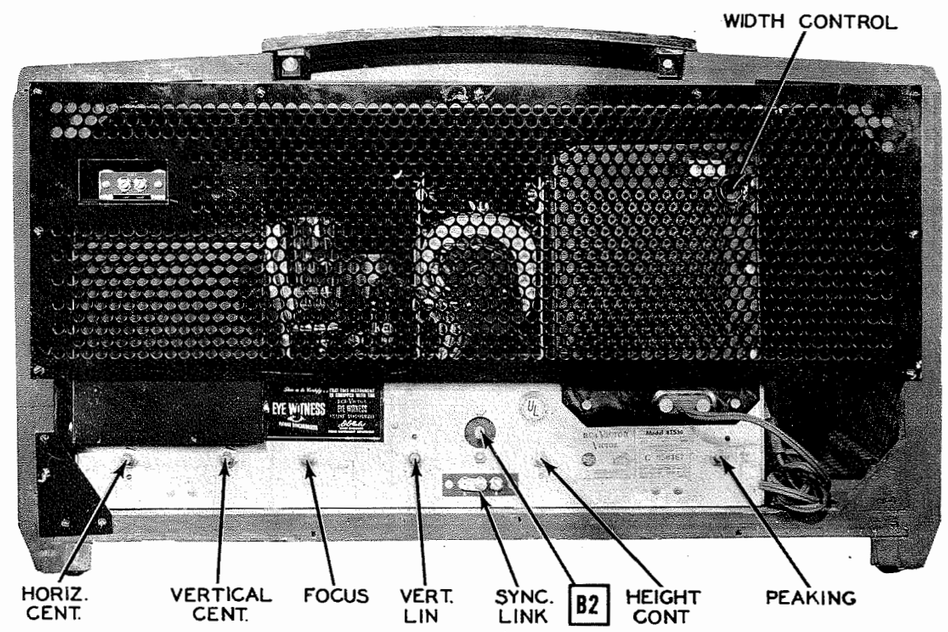

CABINET-REAR VIEW

VOLTAGE AND RESISTANCE MEASUREMENTS

VOLTAGE READINGS

Item	Tube	Pin 1	Pin 2	Pin 3	Pin 4	Pin 5	Pin 6	Pin 7	Pin 8	Cap
V 1	6J6	50VDC	50VDC	6.2VAC	0V.	-.2VDC	-.2VDC	0V.	-	-
V 2	6J6	95VDC	95VDC	6.2VAC	0V.	-2VDC	-3.1VDC	0V.	-	-
V 3	6J6	55VDC	55VDC	6.2VAC	0V.	-5.4VDC	-5.2VDC	.2VDC	-	-
V 4	6AG5	0V.	0V.	0V.	6.2VAC	95VDC	95VDC	.3VDC	-	-
V 5	6AG5	-.8VDC	.2VDC	6.2VAC	0V.	98VDC	98VDC	.2VDC	-	-
V 6	6AG5	-.8VDC	.2VDC	6.2VAC	0V.	93VDC	105VDC	.2VDC	-	-
V 7	6AG5	0V.	1VDC	6.2VAC	0V.	85VDC	110VDC	1VDC	-	-
V 8	6AL5	0V.	0V.	6.2VAC	0V.	.7VDC	0V.	0V.	-	-
V 9	6AU6	-.6VDC	0V.	0V.	6.2VAC	255VDC	117VDC	0V.	-	-
V 10	6K6GT	0V.	0V.	92VDC	117VDC	-2VDC	0V.	6.2VAC	2.8VDC	-
V 11	6BA6	0V.	0V.	0V.	6.2VAC	103VDC	103VDC	1.4VDC	-	-
V 12	6BA6	0V.	0V.	6.2VAC	0V.	107VDC	105VDC	1VDC	-	-
V 13	6AU6	-.3VDC	0V.	0V.	6.2VAC	45VDC	45VDC	0V.	-	-
V 14	6AL5	2.2VDC	-.4VDC	4.9VAC	0V.	0V.	0V.	-.7VDC	-	-
V 15	6AT6	-.4VDC	0V.	0V.	6.2VAC	-.8VDC	-.8VDC	75VDC	-	-
V 16	6K6GT	0V.	6.2VAC	240VDC	250VDC	-9VDC	0V.	0V.	0V.	-
V 17	6SK7	0V.	0V.	0V.	-.8VDC	0V.	108VDC	6.2VAC	208VDC	-
V 18	6SH7	0V.	0V.	0V.	-2.6VDC	0V.	117VDC	6.2VAC	115VDC	-
V 19	6SN7GT	-1.4VDC	77VDC	0V.	-120VDC	-37VDC	-90VDC	6.2VAC	0V.	-
V 20	6AL5	-.8VDC	-5.8VDC	0V.	4.9VAC	-2VDC	0V.	-6.5VDC	-	-
V 21	6AC7	0V.	0V.	0V.	-.9VDC	0V.	105VDC	6.2VAC	190VDC	-
V 22	6K6GT	0V.	0V.	170VDC	210VDC	-18.5VDC	340VDC	6.2VAC	.3VDC	-
V 23	6BG6-G	0V.	6.2VAC	-82VDC	0V.	-94VDC	0V.	0V.	165VDC	#
V 24	5V4G	0V.	350VDC	0V.	290VDC	0V.	290VDC	0V.	350VDC	-
V 25	6J5	0V.	0V.	-3.2VDC 200VDC	-90VDC	-115VDC	-85VDC	6.2VAC	-90VDC	-
V 26	6K6GT	0V.	6.2VAC	187VDC	187VDC	-55VDC	-67VDC	0V.	-50VDC	-
V 27	1B3GT	#DO NOT	MEASURE.							
V 28	5U4G	0V.	350VDC	0V.	360VAC	0V.	360VAC	0V.	350VDC	-
V 29	5U4G	0V.	350VDC	0V.	360VAC	0V.	360VAC	0V.	350VDC	-
V 30	10BP4	0V.	1VDC	PIN 10 280VDC	PIN 11 0V.	PIN 12 6.2VAC				

#DO NOT MEASURE.

RESISTANCE READINGS

Item	Tube	Pin 1	Pin 2	Pin 3	Pin 4	Pin 5	Pin 6	Pin 7	Pin 8	Cap
V 1	6J6	6KΩ*	6KΩ*	.1Ω	0Ω	1KΩ	1KΩ	0Ω	-	-
V 2	6J6	3KΩ*	3KΩ*	.1Ω	0Ω	1 Meg.	1 Meg.	0Ω	-	-
V 3	6J6	6.8KΩ*	6.8KΩ*	.1Ω	0Ω	100KΩ	100KΩ	47Ω	-	-
V 4	6AG5	17KΩ	40Ω	0Ω	.1Ω	3KΩ*	3KΩ*	40Ω	-	-
V 5	6AG5	16KΩ	40Ω	.1Ω	0Ω	3KΩ*	3KΩ*	40Ω	-	-
V 6	6AG5	10KΩ	40Ω	.1Ω	0Ω	5KΩ*	2.5KΩ*	40Ω	-	-
V 7	6AG5	.2Ω	150Ω	.1Ω	0Ω	7.5KΩ*	2.5KΩ*	150Ω	-	-
V 8	6AL5	.2Ω	100KΩ	.1Ω	0Ω	1.2 Meg.	0Ω	4KΩ	-	-
V 9	6AU6	500KΩ	0Ω	0Ω	.1Ω	9KΩ*	1.4KΩ*	0Ω	-	-
V 10	6K6GT	0Ω	0Ω	4.5KΩ*	1.4KΩ*	500KΩ	INF.	.1Ω	330Ω	-
V 11	6BA6	.1Ω	0Ω	0Ω	.1Ω	2.5KΩ*	2.5KΩ*	100Ω	-	-
V 12	6BA6	500KΩ	0Ω	.1Ω	0Ω	2.5KΩ*	4.2KΩ*	100Ω	-	-
V 13	6AU6	20KΩ	0Ω	0Ω	.1Ω	7KΩ*	7KΩ*	0Ω	-	-
V 14	6AL5	200KΩ	100KΩ	.1Ω	0Ω	0Ω	0Ω	100KΩ	-	-
V 15	6AT6	10 Meg.	0Ω	0Ω	.1Ω	10KΩ	10KΩ	330KΩ*	-	-
V 16	6K6GT	INF.	.1Ω	1.5KΩ*	1KΩ*	250KΩ	260KΩ	0Ω	0Ω	-
V 17	6SK7	0Ω	0Ω	0Ω	900KΩ	0Ω	2.2KΩ*	.1Ω	9KΩ*	-
V 18	6SH7	0Ω	0Ω	0Ω	900KΩ	0Ω	1.4KΩ*	.1Ω	7.5KΩ*	-
V 19	6SN7GT	1.2 Meg.	7KΩ*	0Ω	230KΩ	650KΩ*	450Ω	.1Ω	0Ω	-
V 20	6AL5	900KΩ	1.5 Meg.	0Ω	.1Ω	12Ω	0Ω	1.5 Meg.	-	-
V 21	6AC7	0Ω	0Ω	0Ω	1.4 Meg.	10Ω	18KΩ*	.1Ω	20KΩ*	-
V 22	6K6GT	INF.	0Ω	5KΩ*	10KΩ*	25KΩ	5.8KΩ*	.1Ω	10Ω	-
V 23	6BG6-G	INF.	.1Ω	540Ω	INF.	450KΩ	INF.	0Ω	9.5KΩ*	6KΩ*
V 24	5V4G	INF.	5.5KΩ*	INF.	50Ω*	INF.	50Ω*	INF.	5.5KΩ*	-
V 25	6J5	0Ω	0Ω	280KΩ* 1.3 Meg.*	65KΩ	1.5 Meg.	65KΩ	.1Ω	450Ω	-
V 26	6K6GT	INF.	.1Ω	10KΩ*	10KΩ*	2.5 Meg.	2500Ω	0Ω	2KΩ 6.3KΩ	-
V 27	1B3GT	INF.	INF.	INF.	INF.	INF.	INF.	INF.	INF.	6KΩ*
V 28	5U4G	INF.	5.5KΩ	INF.	460Ω	INF.	460Ω	INF.	5.5KΩ	-
V 29	5U4G	INF.	5.5KΩ	INF.	460Ω	INF.	460Ω	INF.	5.5KΩ	-
V 30	10BP4	0Ω	1.3 Meg.	PIN #10 150KΩ*	PIN #11 0Ω	PIN #12 .1Ω				

*MEASURED FROM PIN 8 OF V28.

1. DC Voltage measurements are at 20,000 ohms per volt; AC Voltages measured at 1000 ohms.
2. Socket connections are shown as bottom views.
3. Measured values are from socket pin to common negative unless otherwise stated.
4. Line voltage maintained at 117 volts for voltage readings.
5. Front panels controls set at maximum.
6. Where readings may vary according to the setting of the service controls, both minimum and maximum readings are given.

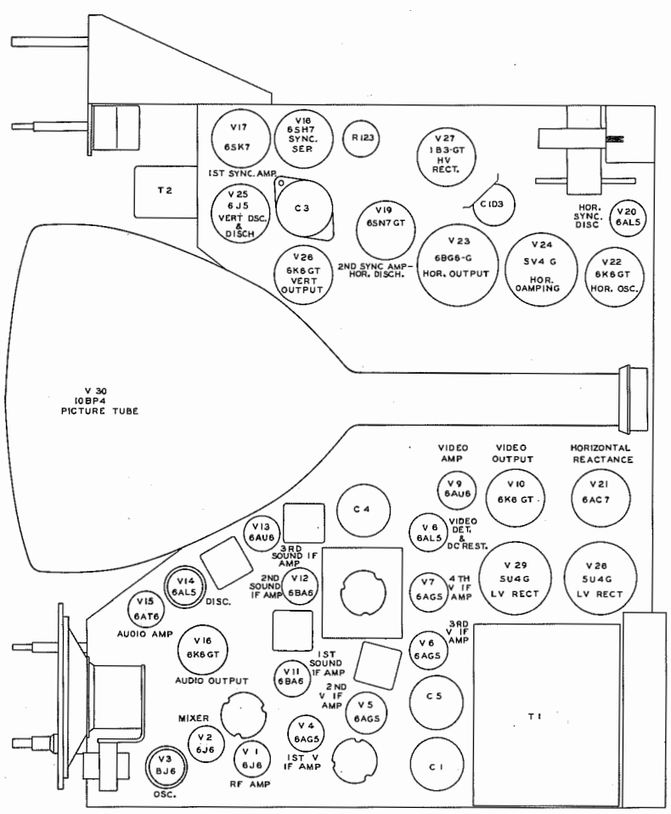

TOP VIEW

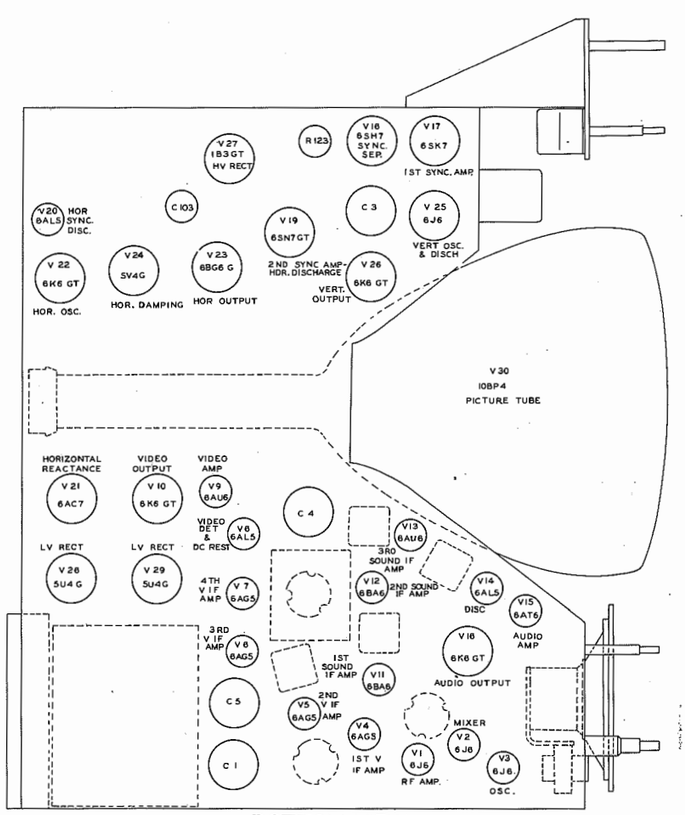

BOTTOM VIEW

TUBE PLACEMENT CHART

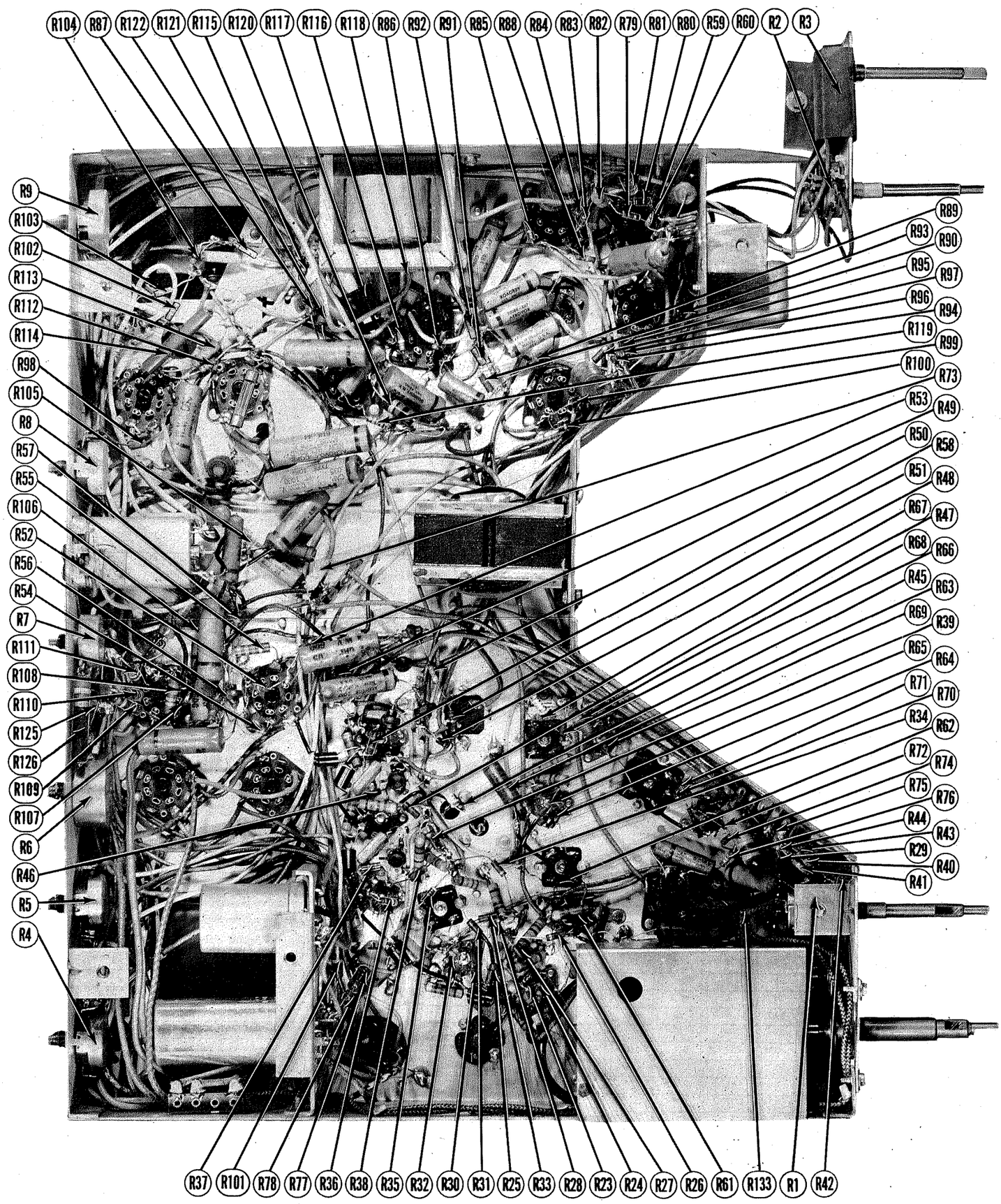

CHASSIS BOTTOM VIEW-RESISTOR IDENTIFICATION

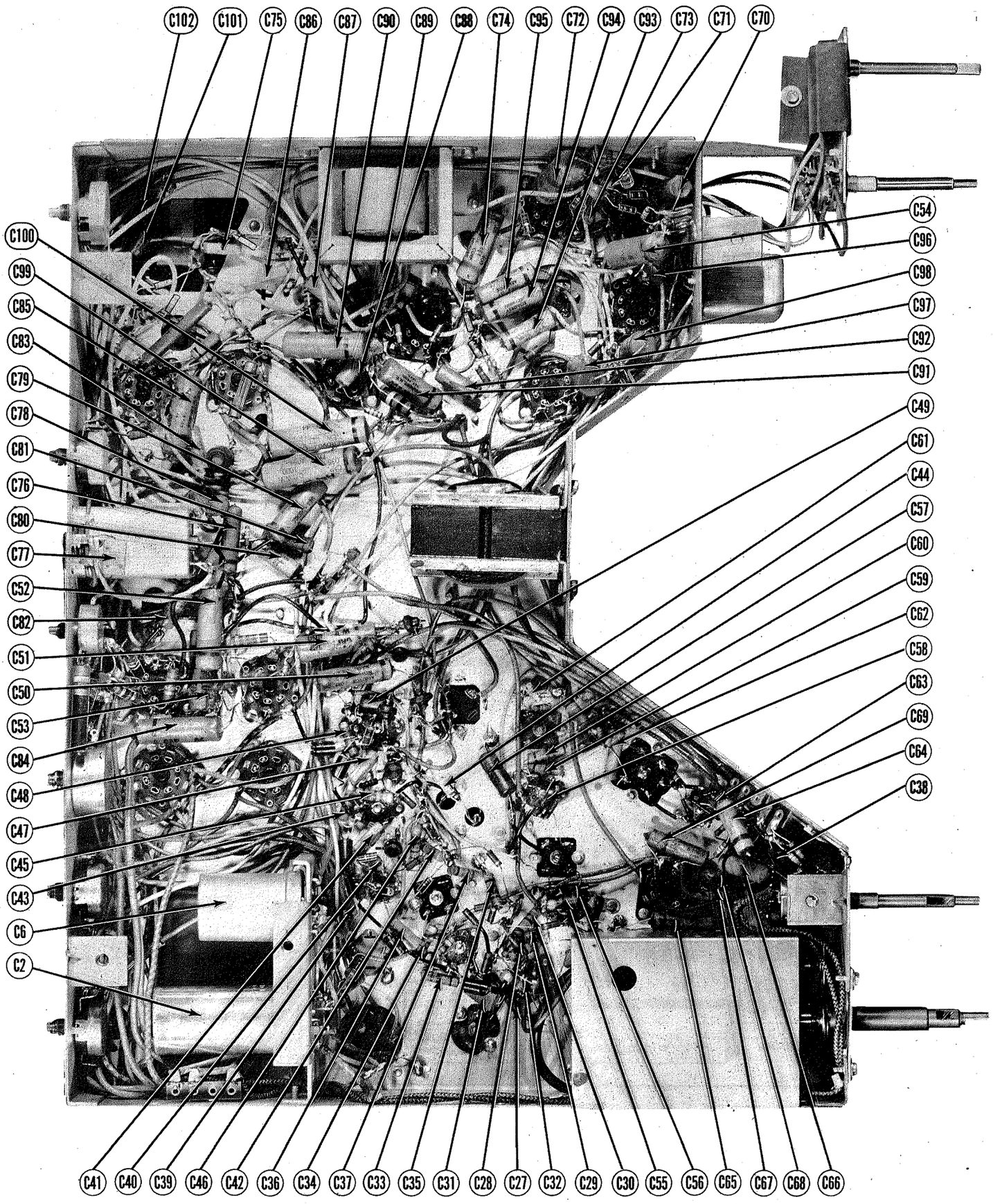

CHASSIS BOTTOM VIEW–CAPACITOR IDENTIFICATION

RCA MODELS 630TS, 630CTS, 8TS30

PARTS LIST AND DESCRIPTIONS (Continued)

TRANSFORMER (POWER)

ITEM No.	RATING PRI.	RATING SEC. 1	RATING SEC. 2	RATING SEC. 3	REPLACEMENT DATA RCA PART No.	STANCOR PART No.	THORDARSON PART No.	MERIT PART No.
T1	2.5 Amp. @ 117 V.	300MA. @ 670V.	5.1 Amp. @ 12V.	6 Amp. @ 5V.	71415	P-8152		
				SEC. 4 2 Amp. @ 5V				

TRANSFORMER (SWEEP CIRCUITS)

ITEM No.	RATING DC RESISTANCE PRI.	RATING DC RESISTANCE SEC.	REPLACEMENT DATA RCA PART No.	STANCOR PART No.	THORDARSON PART No.	MERIT PART No.	NOTES
T2	165Ω	1310Ω	71418	A-8121	TV-24A88	A-4000	Vert. Block.Osc. Trans.
T3	600Ω	6.5Ω	71417	A-8115	TV-24S86	A-3035	Vert. Output Trans.
T4	37Ω	35Ω tapped @ 9.5Ω	71428				Hor. Sync. Disc. Trans
T5	420Ω tapped @ 180Ω	10.6Ω tapped @ .6Ω SEC. 2 0Ω	71416				Hor. Output Trans.
T6	247Ω		71421	FC-10			Focus Coil
T7	33Ω	3Ω	71522				Ion Trap*
T8A	68Ω		71420	DY-1			Vert. Deflection Yoke
B	14Ω						Hor. Deflection Yoke

*Some models use PM Type Ion Trap.

TRANSFORMER (AUDIO OUTPUT)

ITEM No.	RATING IMPEDANCE PRI.	RATING IMPEDANCE SEC.	RATING DC RES. PRI.	RATING DC RES. SEC.	REPLACEMENT DATA RCA PART No.	STANCOR PART No.	THORDAR'N PART No.	MERIT PART No.	INSTALLATION NOTES
T9	7300Ω	3.2Ω	48Ω	.7Ω	71419	A-3878	T2S847	A-2931	

SPEAKER

ITEM No.	RATINGS		REPLACEMENT DATA RCA PART No.	JENSEN PART No.	QUAM PART No.	INSTALLATION NOTES
	FIELD RES.	VC IMP.				
SP1A	PM	3.2Ω				
B	6Ω	3.2Ω	71530			Alternate 5" Dynamic Speaker
C	6Ω	3.2Ω	71556			Alternate 12" Dynamic Speaker
	CONE DIA.	VC DIA.				
SP2A	4-7/8" x 7-1/8"	9/16"				
B	5"	9/16"				
C	12"	3/4"	36145			

FILTER CHOKE

ITEM No.	RATINGS TOTAL DIRECT CURRENT	RATINGS D.C. RESISTANCE	RATINGS INDUCTANCE (0 CURRENT 1000 ~)	REPLACEMENT DATA RCA PART No.	STANCOR PART No.	THORDARSON PART No.	MERIT PART No.	INSTALLATION NOTES
L1	300MA	5Ω	3 Henries		C-2326*			*Redrill new mtg. hole.

COILS (RF-IF)

ITEM No.	USE	DC RES. PRI.	DC RES. SEC.	REPLACEMENT DATA RCA PART No.	MEISSNER PART No.	NOTES
L2	Ant. Trans.	0Ω		71507		
L3	Interference Trap	0Ω				
L4	"	0Ω				
L5	Fil. Choke	0Ω		71505		
L6	Mixer Grid Coil	.1Ω		71506		
L7	1st Video IF & Sound Trap	.2Ω		71495		Part of Tuner Assy.
L8	Fil. Choke	0Ω		71505		
L9	2nd Video IF	.2Ω	0Ω	71423		
L10	Fil. Choke	0Ω		71505		
L11	3rd Video IF	.2Ω	0Ω	71425		
L12	Fil. Choke	0Ω		71505		
L13	4th Video IF	.2Ω		71426		
L14	Sound Trap	.1Ω		71422		
L15	Fil. Choke	0Ω		71505		
L16	5th Video IF	.1Ω		71426		
L17	Fil. Choke	0Ω		71505		
L18	Peaking Coil	6Ω		71528		Wound on 39KΩ resistor, 180 Microhenry.
L19	" "	8Ω		71526		250 Microhenry
L20	" "	5Ω		71529		Wound on 22KΩ resistor, 120 Microhenry.
L21	" "	4Ω		71527		93 Microhenry
L22	" "	5Ω		71529		Wound on 22KΩ resistor, 120 Microhenry.
L23	" "	4Ω		71527		93 Microhenry
L24	1st Sound IF	.2Ω	0Ω	71424		
L25	2nd " "	.1Ω	0Ω	71424		
L26	Sound Disc. Trans.	0Ω	0Ω	71427		
L27	Hor. Width Control	.6Ω		71429		
L28	Hor. Linearity Cont.	37Ω		71449		

DIAL LIGHTS

ITEM No.	BASE TYPE	VOLTS	AMPS.	BEAD COLOR	REPLACEMENT DATA RCA PART No.		NOTES
M1	Bayonet	6-8	.15	Brown	31480		Type 47-Used in 630TCS only

MISCELLANEOUS

ITEM No.	PART NAME	RCA PART No.	NOTES
M2	Fuse		AGC 1/4 Amp.
M3	Tuner Assy.		Complete Unit
M4	Power Cord	71457	
M5	Receptacle	71448	Power Interlock Plug
M6	Terminal Board	71454	Sync. Link (3 Terminals with Link)
M7	" "	71460	Antenna (2 Terminals)
	Knob	71535	Contrast, Brightness or Vertical Hold
	"	71537	Dummy Brightness
	"	71533	Fine Tuning
	"	71536	Horiz. Hold or Volume
	"	71534	Channel Selector
	Safety Glass	71981	
	Plate Cap.	71532	Hi Volt. Rect. & Horiz. Output Plates
	Escutcheon	71598	Channel Indicator
	Anode Connector	71523	Picture Tube Anode Plug
	Socket	71525	Picture Tube Socket

BLOCK DIAGRAM

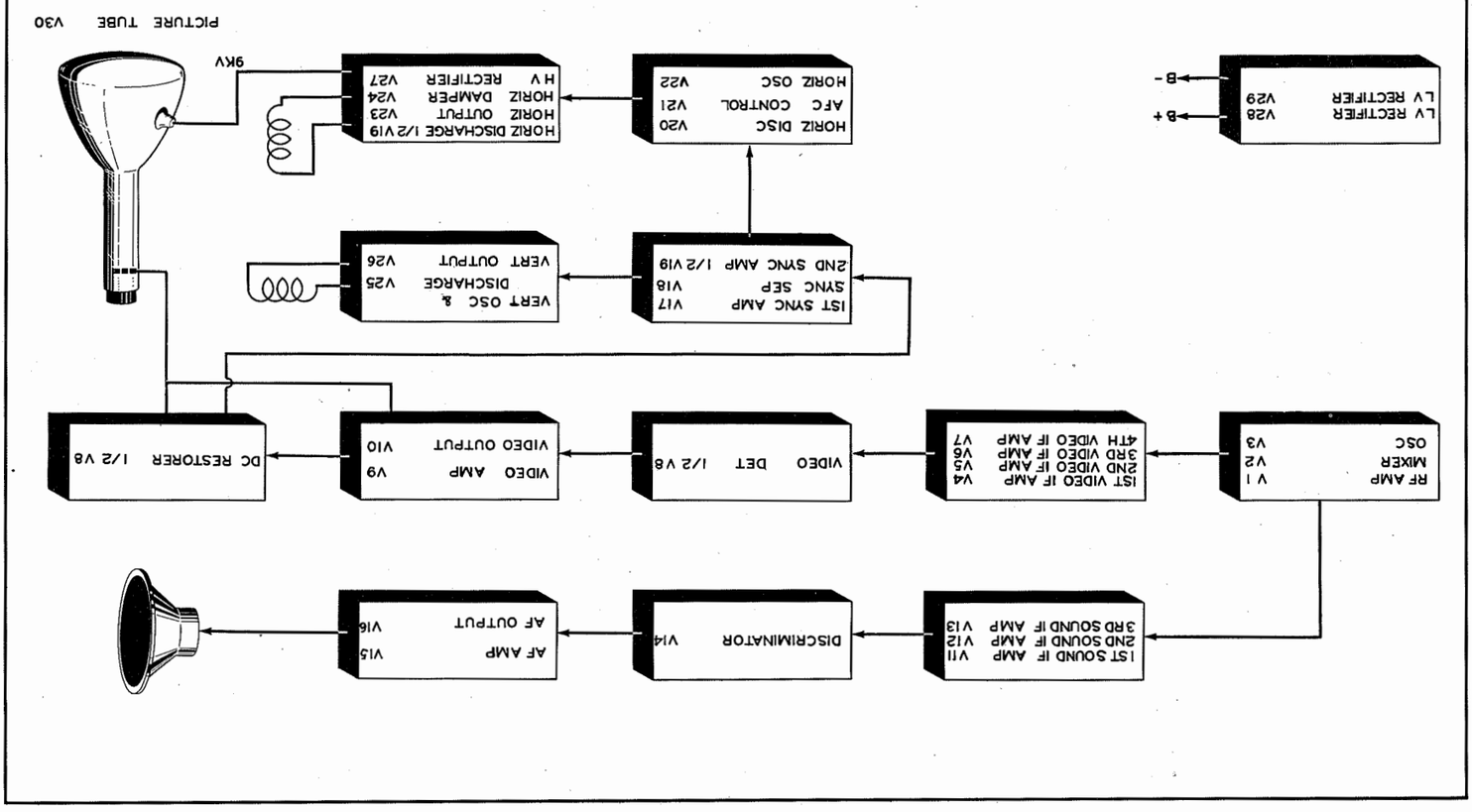

ALIGNMENT INSTRUCTIONS

PRE – ALIGNMENT INSTRUCTIONS—READ CAREFULLY BEFORE ATTEMPTING ALIGNMENT

If alignment is performed with picture tube removed, remove V22 from its socket to disable the high voltage supply.
The oscillator tube (V3) should be removed when performing IF adjustments. Use insulated alignment screwdriver for adjusting.

VIDEO IF ALIGNMENT

If receiver is badly misaligned making it impossible to get sufficent reading on VTVM with the signal being fed to the ant. terminals, signal may be fed to the mixer grid. This point is accessible through the hole in the chassis on right side of tuner (Point Ⓑ).

	DUMMY ANTENNA	SIGNAL GENERATOR COUPLING	SIGNAL GENERATOR FREQUENCY	CHANNEL	CONNECT VTVM	ADJUST	REMARKS
1				9	DC probe to junction of R40 and R41. Common to chassis.		Set contrast control to give a -3 volt reading. Leave at this setting during entire IF Alignment procedure.
2	Direct	To ant. terminals. (See prealignment notes)	19.75MC	9	DC probe to point Ⓐ. Common to chassis.	A1	Adjust for minimum deflection.
3	Direct	"	21.25MC	9	"	A2	"
4	Direct	"	21.25MC	9	"	A3	"
5	Direct	"	27.25MC	9	"	A4	"
6	Direct	"	21.8MC	9	"	A5	Adjust for maximum deflection.
7	Direct	"	25.3MC	9	"	A6	"
8	Direct	"	22.3MC	9	"	A7	"
9	Direct	"	25.2MC	9	"	A8	"
10	Direct	"	23.4MC	9	"	A9	Adjust for maximum deflection. If A7 required adjustment in Step 8 repeat Step 2. If FM signal gen. is not available continue with Step 12.

OVERALL VIDEO IF ALIGNMENT

Connect the synchronized sweep voltage from the signal generator to the horizontal amplifier in the scope for horizontal deflection.
The waveforms shown may be inverted depending on the number of amplifying stages in the vertical amplifier in the scope being used.

	DUMMY ANTENNA	SIGNAL GENERATOR COUPLING	SWEEP GENERATOR FREQUENCY	MARKER GENERATOR FREQUENCY	CHANNEL	CONNECT SCOPE	ADJUST	REMARKS
11	5000 MMF	To dummy mixer tube. (See Fig. 6).	24MC (10MC sweep)	See Fig. 4.	9	Vert. Amp. to Point Ⓐ. Ground to chassis.	A5,A6, A7,A8, A9	Make slight adjustments if necessary to obtain response curve per Fig. 4. If considerable adjustment is required the traps must be realigned.

SOUND IF ALIGNMENT USING VTVM

Do not remove the shield covering the discriminator tube socket during Step 12. Fashion hook on 1 Megohm resistor and make connection to Point Ⓑ through alignment hole in shield.

	DUMMY ANTENNA	SIGNAL GENERATOR COUPLING	SIGNAL GENERATOR FREQUENCY	CHANNEL	CONNECT VTVM	ADJUST	REMARKS
12	5000MMF	High side to Pin #1 of 3rd Sound IF (V13). Low side to chassis.	21.25MC	9	DC probe to Point Ⓑ in series with 1 Meg. Common to chassis.	A10	Detune A11. Adjust A10 for maximum deflection.
13	5000MMF	"	"	9	DC probe to Point Ⓑ. Common to chassis.	A11	Adjust for zero reading. A positive or negative reading is obtained on either side of correct setting.
14	5000MMF	High side to Pin #1 of 2nd Sound IF (V12). Low side to chassis.	"	9	DC probe to Point Ⓑ. Common to chassis	A12,A13	Adjust for maximum deflection.
15	5000MMF	High side to tap on trap winding of L7. Low side to chassis.	"	9	"	A14, A15	"

SOUND IF ALIGNMENT USING FM SIGNAL GENERATOR AND OSCILLOSCOPE

	DUMMY ANTENNA	SIGNAL GENERATOR COUPLING	SWEEP GENERATOR FREQUENCY	MARKER GENERATOR FREQUENCY	CHANNEL	CONNECT SCOPE	ADJUST	REMARKS
12	5000MMF	High side to Pin 1 of 3rd Sound IF (V13). Low side to chassis.	21.25MC (600KC sweep)	21.25MC	9	Vertical amp. to Point Ⓑ. Ground to chassis.	A10,A11	Adjust for maximum amplitude of peaks and straightness of diagonal line with marker at center of line.
13	5000MMF	High side to Pin 1 of 2nd Sound IF (V12). Low side to chassis.	"	"	9	Vert. amp. to Point Ⓑ in series with 33KΩ. Ground to chassis.	A12,A13	Adjust for maximum amplitude and symmetry per Fig. 2.
14	5000MMF	High side to tap on trap winding of L7. Low side to chassis.	"	"	9	"	A14,A15	Adjust for maximum amplitude and symmetry per Fig. 3. Continue with Step 16.

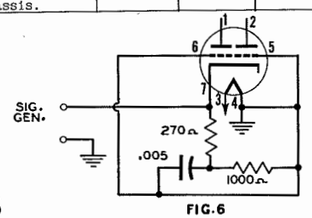

FIG.6

DUMMY MIXER TUBE

CAREFULLY BEND PIN 7 AT RIGHT ANGLE. CONNECT PINS 5 & 6 TO PIN 4 WHICH IS GROUNDED AT THE SOCKET. CONNECT OTHER COMPONENTS AS SHOWN.

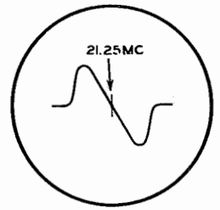

FIG. 1

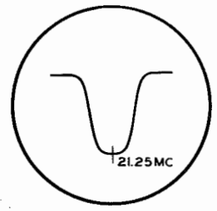

FIG. 2

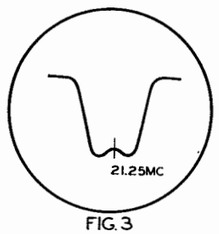

FIG.3

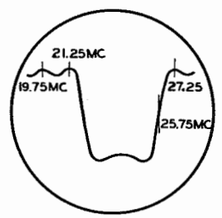

FIG.4

FIG.5

RF & MIXER LINE ALIGNMENT

On those models having the RF Grid returned to the contrast control it is necessary to set the bias at -1.5 volts. Connect DC probe of VTVM to pin 5 or 6 of 1st AF Tube (V15), common to chassis and set contrast control for reading of -1.5 volts.
The signal generator output should be terminated with a resistance equal to its output impedance (usually 50 ohms).
These adjustments are usually very stable and alignment should not be attempted unless they are known to be out of alignment.

	DUMMY ANTENNA	SIGNAL GENERATOR COUPLING	SWEEP GENERATOR FREQUENCY	MARKER GENERATOR FREQUENCY	CHANNEL	CONNECT SCOPE	ADJUST	REMARKS
16	120Ω carbon res. in series with each lead	To ant. terminals.	177MC (10MC sweep)	175.25MC and 179.75MC	7	Vert. amp. to Point Ⓑ in series with 10KΩ. Ground to chassis.	A16,A17, A18,A19	Adjust for approx. flat top response per Fig. 5 with markers above 70%.
17	"	"	183MC (10MC sweep)	181.25MC and 185.75MC	8	"		Check for response curve per Fig. 5.
18	"	"	189MC (10MC sweep)	187.25MC and 191.75MC	9	"		"
19	"	"	195MC (10MC sweep)	193.25MC and 197.75MC	10	"		"
20	"	"	201MC (10MC sweep)	199.25MC and 203.75MC	11	"		"
21	"	"	207MC (10MC sweep)	205.25MC and 209.75MC	12	"		"
22	"	"	213MC (10MC sweep)	211.25MC and 215.75MC	13	"		"

If markers are below 70% on any channel make slight adjustment of A16. A17, A18 and A19 with channel selector on that channel. Recheck the other high band channels.

	DUMMY ANTENNA	SIGNAL GENERATOR COUPLING	SIGNAL GENERATOR FREQUENCY	MARKER GENERATOR FREQUENCY	CHANNEL	CONNECT SCOPE	ADJUST	REMARKS
23	120Ω carbon res. in series with each lead	To ant. terminals.	85MC (10MC sweep)	83.25MC and 87.75MC	6	Vert. amp. to Point Ⓑ in series with 10KΩ. Ground to chassis.	A20,A21 A22,A23	Adjust for approx. flat top response per Fig. 5 with markers above 70%.
24	"	"	79MC (10MC sweep)	77.25MC and 81.75MC	5	"		Check for response curve per Fig. 5.
25	"	"	69MC (10MC sweep)	67.25MC and 71.75MC	4	"		"
26	"	"	63MC (10MC sweep)	61.25MC and 65.75MC	3	"		"
27	"	"	57MC (10MC sweep)	55.25MC and 59.75MC	2	"		"

If markers are below 70% on any channel make slight adjustments of A20, A21, A22 and A23 with channel selector on that channel. Recheck the other low band channels.

OSCILLATOR ALIGNMENT

	DUMMY ANTENNA	SIGNAL GENERATOR COUPLING	SWEEP GENERATOR FREQUENCY	CHANNEL	CONNECT VTVM	ADJUST	REMARKS
28	2 - 120Ω carbon res.	To ant. terminals.	215.75MC	13	DC probe to Point Ⓑ. Common to chassis.	A24,A25	Adjust for zero reading. A positive and negative reading is obtained on either side of correct setting. Keep A24 and A25 slugs at approx. the same relative setting.
29	"	"	209.75MC	12	"	A26	Adjust for zero reading as above.
30	"	"	203.75MC	11	"	A27	"
31	"	"	197.75MC	10	"	A28	"
32	"	"	191.75MC	9	"	A29	"
33	"	"	185.75MC	8	"	A30	"
34	"	"	179.75MC	7	"	A31	"
35	"	"	87.75MC	6	"	A32,A33	Adjust for zero reading keeping A32 and A33 slugs at approx. the same relative position.
36	"	"	81.75MC	5	"	A34	Adjust for zero reading.
37	"	"	71.75MC	4	"	A35	" " " "
38	"	"	65.75MC	3	"	A36	" " " "
39	"	"	59.75MC	2	"	A37	" " " "

MIXER GRID TRAP ADJUSTMENT

A. Match the output of the signal generator (usually 50Ω carbon resistor across the gen. output and 120Ω carbon resistors in each lead) and connect to receiver antenna terminals.
B. Connect oscilloscope to Point Ⓑ through 10KΩ.
C. Shunt 1st Video IF Grid to ground with 1000 MMF cap. using shortest possible leads.
D. Loosely couple marker generator to antenna terminals.
E. Turn channel switch and marker generator through low frequency channels and observe response of each channel.
F. Select channel that is essentially flat with sound and picture markers at 80% or more on the response curve.
G. Remove shunt on 1st IF Grid and shunt the 2nd Video IF Grid to ground.
H. Adjust A38 (rear of tuner) for RF response similar to one selected with 1st IF Grid shunted.
NOTE: In later productions A38 is a fixed capacitor (C18). In those receivers this step may be followed as a check that correct mixer operation is obtained.

RCA MODELS 630TS, 630CTS, 8TS30

PARTS LIST AND DESCRIPTIONS

TUBES (SYLVANIA or Equivalent)

ITEM No.	USE	REPLACEMENT DATA: RCA PART No.	REPLACEMENT DATA: STANDARD REPLACEMENT	RMA BASE TYPE	NOTES
V1	RF Amp.	6J6	6J6	7BF	
V2	Mixer	6J6	6J6	7BF	
V3	Oscillator	6J6	6J6	7BF	
V4	1st V. IF Amp.	6AG5	6AG5	7BD	
V5	2nd V. IF Amp.	6AG5	6AG5	7BD	
V6	3rd V. IF Amp.	6AG5	6AG5	7BD	
V7	4th V. IF Amp.	6AG5	6AG5	7BD	
V8	Video Det., DC Res.	6AL5	6AL5	6BT	
V9	Video Amp.	6AU6	6AU6	7BK	
V10	Video Output	6K6GT	6K6GT	7S	
V11	1st S. IF Amp.	6BA6	6BA6	7BK	
V12	2nd S. IF Amp.	6BA6	6BA6	7BK	
V13	3rd S. IF Amp.	6AU6	6AU6	7BK	
V14	Sound Disc.	6AL5	6AL5	6BT	
V15	Audio Amp.	6AT6	6AT6	7BT	
V16	Power Output	6K6GT	6K6GT	7S	
V17	1st Sync. Amp.	6SK7	6SK7	8N	
V18	Sync. Sep.	6SH7	6SH7	8BK	
V19	2nd Sync. Amp., Hor. Dis.	6SN7GT	6SN7GT	8BD	
V20	Hor. Sync. Disc	6AL5	6AL5	6BT	
V21	Hor. React.	6AC7	6AC7	8N	
V22	Hor. Osc.	6K6GT	6K6GT	7S	
V23	Hor. Output	6BG6-G	6BG6-G	5BT	
V24	Hor. Damper	5V4G	5V4G	5L	
V25	Vert. Osc., Discharge	6J5	6J5	6Q	
V26	Vert. Output	6K6GT	6K6GT	7S	
V27	H.V. Rect.	1B3GT	1B3GT	3C	
V28	L.V. Rect.	5U4G	5U4G	5T	
V29	L.V. Rect.	5U4G	5U4G	5T	
V30	Picture Tube	10BP4	10BP4		

CONTROLS

ITEM No.	RATING: RESISTANCE	RATING: WATTS	REPLACEMENT DATA: RCA PART No.	REPLACEMENT DATA: CLAROSTAT PART No.	REPLACEMENT DATA: IRC PART No.	NOTES
R1A	1 Meg.	½	71446			Volume-Tapped @ 200KΩ
B	& 10KΩ	½				Contrast — Dual Control
C	Switch					On-Off Switch-SPST
R2A	1 Meg.	½	71445			Vertical Hold — Dual Control
B	& 50KΩ	½				Horizontal Hold
R3A	50KΩ	½	71444	M-44-S	D11-123	Brightness
B	Shaft			Not Req.	A	Attach to R3A per instructions
R4	20Ω	2	71443	43-20	W-20	Horiz. Centering-Center Tap Not Used
R5	20Ω	2	71443	43-20CT	W20X10	Vert. Centering-Tapped @ 10Ω
R6	150Ω	4	71442			Focus
R7A	500Ω	½	71441	AM-19-S	D11-114	Vert. Linearity
B	Shaft			K6S-3	E	Attach to R7A per instructions
R8	2.5 Meg.	½	71440			Height
R9A	20KΩ	½	71447	AM-40-S	D11-120	Peaking
B	Shaft			K6S-3	E	Attach to R9A per instructions

CAPACITORS

Capacity values given in the rating column are in mfd. for Electrolytic and Paper Capacitors, and in mmfd. for Mica and Ceramic Capacitors.

ITEM No.	RATING: CAP.	RATING: VOLT	REPLACEMENT DATA: RCA PART No.	AEROVOX PART No.	CORNELL-DUBILIER PART No.	SOLAR PART No.	SPRAGUE PART No.	IDENTIFICATION CODES AND INSTALLATION NOTES
C1A	40	450	71431		UP9C729-2		D14367	◓ Filter
B	10	450						■ "
C	80	150						▲ Bias Filter
C2A	40	450	71432		UP9C897-2		D14648	◓ Filter
B	40	450						■ "
C	10	450						▲ Vert. Out. Plate Decoup
C3A	80	450	71433		UP9B730-3		D14369	◓ Filter
B	50	50						▲ Vert. Out. Cath.
C4A	40	450	71434		UP9C731-1		D14370	◓ Filter
B	10	450						■ Low Pass Filter
C	10	350						▲ 2nd Sync. Amp. Plate
C5A	20	450	71435		UP9B337-1		D14371	◓ Audio Out. Screen
B	80	350						▲ Filter
C6A	250	10	71436		UP7B808-4		D14338	■ "
B	1000	6						▲ "
C7	270		71540					Ant. Coupling -Cer.
C8	270		71540					" " "
C9	1500		71501					RF Bypass "
C10	10							Fixed Trimmer "
C11	10							" " "
C12	1.5		71500					RF Neutralizer "
C13	1.5		71500					" " "
C14	.68		71504					RF Coupling "
C15	4.7		71520					" " "
C16	2.2		71502					" " "
C17	1500		71501					RF Decoupling "
C18	270		71540					RF Bypass "
C19	10							RF Decoupling "
C20	1500		71501					" " "
C21	270	500	65401					IF Coupling
C22	68							Fixed Trimmer "
C23	1500		71501					Mixer Decoupling "
C24	4.7		71520					Osc. Feedback "
C25	4.7		71520					" " "
C26	1500		71501	1467-0015	1W5D15	MW.5-215	1FM-215	Fil. Bypass "
C27	1500		71501	1467-0015	1W5D15	MW.5-215	1FM-215	" " "
C28	1500		71501	1467-0015	1W5D15	MW.5-215	1FM-215	Bias Filter "
C29	1500		71501	1467-0015	1W5D15	MW.5-215	1FM-215	1st V. IF Decoup. "
C30	1500		71501	1467-0015	1W5D15	MW.5-215	1FM-215	RF Bypass "
C31	270	500	65401	1468-0003	5W5T3	MO.5-33		Video IF Coupling "
C32	1500		71501	1467-0015	1W5D15	MW.5-215	1FM-215	Bias Filter "
C33	1500		71501	1467-0015	1W5D15	MW.5-215	1FM-215	2nd V. IF Fil. Byp. "
C34	1500		71501	1467-0015	1W5D15	MW.5-215	1FM-215	2nd V. IF Decoup. "
C35	1500		71501	1467-0015	1W5D15	MW.5-215	1FM-215	RF Bypass "
C36	270	500	65401	1468-0003	5W5T3	MO.5-33		Video IF Coup. "
C37	1500		71501	1467-0015	1W5D15	MW.5-215	1FM-215	Bias Filter "
C38	.25	400	70618	484-.25	DT4P25	ST-4-25	TC-2	" " "
C39	1500		71501	1467-0015	1W5D15	MW.5-215	1FM-215	3rd V. IF Fil. Byp. "
C40	1500		71501	1467-0015	1W5D15	MW.5-215	1FM-215	3rd V. IF Decoup. "
C41	270	500	65401	1468-0003	5W5T3	MO.5-33		Video IF Coupling
C42	1500		71501	1467-0015	1W5D15	MW.5-215	1FM-215	RF Bypass "
C43	1500		71501	1467-0015	1W5D15	MW.5-215	1FM-215	4th V. IF Fil. Byp. "
C44	82		71514					4th V. IF Cath. "
C45	1500		71501	1467-0015	1W5D15	MW.5-215	1FM-215	4th V. IF Decoup. "
C46	1500		71501	1467-0015	1W5D15	MW.5-215	1FM-215	RF Bypass "
C47	270	500	65401	1468-0003	5W5T3	MO.5-33		Video Coupling
C48	1500		71501	1467-0015	1W5D15	MW.5-215	1FM-215	Video Det. Fil. Byp. "
C49	10	500	39604	1468-00001	5W5Q1	MO.5-41		RF Filter
C50	.05	400	70615	484-05	DT4S5	ST-4-05	TM-15	Video Coupling
C51	.05	400	70615	484-05	DT4S5	ST-4-05	TM-15	" " "
C52	.05	400	70615	484-05	DT4S5	ST-4-05	TM-15	" "
C53	.05	400	70615	484-05	DT4S5	ST-4-05	TM-15	" "
C54	.25	400	70618	484-.25	DT4P25	ST-4-25	TC-2	Bias Filter
C55	1500		71501	1467-0015	1W5D15	MW.5-215	1FM-215	1st S. IF Cath. Byp. "
C56	1500		71501	1467-0015	1W5D15	MW.5-215	1FM-215	1st S. IF Decoup. "
C57	.01	400	70610	484-01	DT4S1	ST-4-01	TM-11	2nd S. IF Grid Filter "
C58	1500		71501	1467-0015	1W5D15	MW.5-215	1FM-215	2nd S. IF Cath. Byp. "
C59	1500		71501	1467-0015	1W5D15	MW.5-215	1FM-215	2nd S. IF Screen Byp."
C60	1500		71501	1467-0015	1W5D15	MW.5-215	1FM-215	2nd S. IF Plate Decoup."
C61	51		71771					3rd S. IF Grid Filter"
C62	6500		71690					3rd S. IF Decoup.
C63	270	500	65401	1468-0003	5W5T3	MO.5-33		De-emphasis
C64	.0025	400	70602					Audio Coupling
C65	.01	400	70610	484-01	DT4S1	ST-4-01	TM-11	Tone Compensation*
C66	.01	400	70610	484-01	DT4S1	ST-4-01	TM-11	Audio Coupling
C67	.0025	400	70602					Audio Plate Byp.†
C68	.005	400	70606	484-005	DT6D5	ST-6-005	TM-25	Audio Coupling
C69	.005	400	70606	484-005	DT6D5	ST-6-005	TM-25	Output Plate Bypass
C70	.05	400	70615	484-05	DT4S5	ST-4-05	TM-15	Sync. Coupling
C71	270	500	39638	1468-0003	5W5T3	MO.5-33		1st Sync. Amp. Plate
C72	.1	400	70617	484-.1	DT4P1	ST-4-1	TM-1	1st Sync. Amp. Plate Decoup.
C73	270	500	39638	1468-0003	5W5T3	MO.5-33		Sync. Coupling
C74	.05	400	70615	484-05	DT4S5	ST-4-05	TM-15	" "
C75	82	500	39626					Hor. Sync. Coupling
C76	.004	1000	70647	1084-004			PX-241	AFC Filter
C77	.01	400	70610	484-01	DT4S1	ST-4-01	TM-11	" " ‡
C78	.015	400	71516					Fixed Trimmer
C79	.05	400	70615	484-05	DT4S5	ST-4-05	TM-15	AFC Filter
C80	.015	400	71516					Phase Shifter
C81	1200		72838					" " "
C82	.004	400	70605	484-004	DT6D4	ST-6-004	TM-24	AFC Coupling
C83	.004	400	70605	484-004	DT6D4	ST-6-004	TM-24	Hor. Sync. Coupling
C84	.05	400	70615	484-05	DT4S5	ST-4-05	TM-15	H. Osc. Contr. Screen"
C85	.05	400	70615	484-05	DT4S5	ST-4-05	TM-15	Hor. Osc. Screen
C86	390	500	39642	1468-0004	5W5T4	MO.5-34	1FM-34	Differentiating Net.
C87	.01	400	70610	484-01	DT4S1	ST-4-01	TM-11	Hor. Sync. Coupling
C88	.001	400	70600	484-001	DT6D1	ST-6-001	TM-21	" " "
C89	680	500	39648					Hor. Discharge
C90	.05	400	70615	484-05	DT4S5	ST-4-05	TM-15	Hor. Output Screen
C91	.1	400	70617	484-.1	DT4P1	ST-4-1	TM-1	Hor. Output Cathode
C92	.01	400	70610	484-01	DT4S1	ST-4-01	TM-11	Vert. Sync. Coupling
C93	.002	400	70601	484-002	DT6D2	ST-6-002	TM-22	Integrating Net.
C94	.005	400	70606	484-005	DT6D5	ST-6-005	TM-25	" " "
C95	.005	400	70606	484-005	DT6D5	ST-6-005	TM-25	" " "
C96	4700	500	39668	1467-005		MW.5-25	1FM-25	Vert. Osc. Grid
C97	.1	400	70617	484-.1	DT4P1	ST-4-1	TM-1	Vert. Coupling
C98	.05	600	71515	684-05	DT6S5	ST-6-05	TM-15	Vert. Discharge
C99	.035	600	71518					Damper Filter
C100	.05	600	71515	684-05	DT6S5	ST-6-05	TM-15	" " "
C101	.01	400	71770	484-01	DT4S1	MPH-6-01	TM-11	Line Filter
C102	.01	400	71770	484-01	DT4S1	MPH-6-01	TM-11	" " "
C103	500		71450					H. V. Filter T.O.

*May be .003 in some models.
†May be .0015 in some models.
‡May be 400 MMF. in some models.

RESISTORS

ITEM No.	RATING: RESISTANCE	RATING: WATTS	REPLACEMENT DATA: RCA PART No.	REPLACEMENT DATA: IRC PART No.	IDENTIFICATION CODES: ALL RESISTORS ± 10% TOLERANCE UNLESS OTHERWISE STATED		
R10	150Ω	½	30880		Br.-Grn.-Br.	RF Amp. Grid	±20%
R11	150Ω	½	30880		Br.-Grn.-Br.	" " "	±20%
R12	1000Ω	½	34766	BTS-1000	Br.-Blk.-Red	Bias Network	±20%
R13	4700Ω	½	30494	BTS-4700	Yl.-Vi.-Red	RF Amp. Plate	±20%
R14	4700Ω	½	30494	BTS-4700	Yl.-Vi.-Red	" " "	±20%
R15	1000Ω	½	34766	BTS-1000	Br.-Blk.-Red	RF Amp. Plate Decoupling	±20%
R16	1 Meg.	½	30652	BTS-1 Meg.	Br.-Blk.-Grn.	Mixer Grid	±20%
R17	4700Ω	½	30494	BTS-4700	Yl.-Vi.-Red	Osc. Plate	±20%
R18	150Ω	½	30880		Br.-Grn.-Br.	Decoupling	±20%
R19	1000Ω	½	34766	BTS-1000	Br.-Blk.-Red	Conv. Plate Decoupling-Note 1	±20%
R20	47Ω	½	30732		Yl.-Vi.-Blk.	Osc. Cathode	±20%
R21	100KΩ	½	3252	BTS-100K	Br.-Blk.-Yl.	Osc. Grid	±20%
R22	100KΩ	½	3252	BTS-100K	Br.-Blk.-Yl.	Osc. Grid	±20%
R23	10KΩ	½	3078	BTS-10K ±5%	Br.-Blk.-Or.	1st Video IF Grid	±5%
R24	39Ω	½	11956		Or.-Wh.-Blk.	1st Video IF Cathode	
R25	1000Ω	½	34766	BTS-1000	Br.-Blk.-Red	IF Contrast Bias Network	±20%
R26	150Ω	½	30880		Br.-Grn.-Br.	Decoupling	
R27	1000Ω	½	34766	BTS-1000	Br.-Blk.-Red	" " "	±20%
R28	150Ω	½	30880		Br.-Grn.-Br.	"	
R29	680KΩ	½	30562	BTS-680K ±5%	Blue-Gray-Yl.	Voltage Dropping	±5%
R30	10KΩ	½	3078	BTS-10K ±5%	Br.-Blk.-Or.	2nd Video IF Grid	±5%
R31	1000Ω	½	34766	BTS-1000	Br.-Blk.-Red	IF Contrast Bias Network	±20%
R32	39Ω	½	11956		Or.-Wh.-Blk.	2nd Video IF Cathode	
R33	1000Ω	½	34766	BTS-1000	Br.-Blk.-Red	Decoupling	±20%
R34	150Ω	½	30880		Br.-Grn.-Br.	"	
R35	4700Ω	½	30494	BTS-4700 ±5%	Yl.-Vi.-Red	3rd Video IF Grid	±5%
R36	39Ω	½	11956		Or.-Wh.-Blk.	3rd Video IF Cathode	
R37	2700Ω	½	30730	BTS-2700 ±5%	Red-Vi.-Red	3rd Video IF Plate	±5%
R38	1000Ω	½	34766	BTS-1000	Br.-Blk.-Red	Decoupling	±20%
R39	150Ω	½	30880		Br.-Grn.-Br.	"	
R40	8200Ω	½	14250	BTS-8200	Gray-Red-Red	Contrast Bias Network	
R41	18KΩ	½	3219	BTS-18K	Br.-Gray-Or.	" " " "	
R42	680Ω	½	12262	BTS-680	Blue-Gray-Br.	" " "	
R43	10KΩ	½	3078	BTS-10K	Br.-Blk.-Or.	" " "	
R44	2700Ω	½	30730	BTS-2700	Red-Vi.-Red	" " "	
R45	150Ω	½	30880		Br.-Grn.-Br.	4th Video IF Cathode	
R46	5600Ω	½	30734	BTS-5600 ±5%	Grn.-Blue-Red	4th Video IF Plate	±5%
R47	1000Ω	½	34766	BTS-1000	Br.-Blk.-Red	Decoupling	±20%
R48	3900Ω	½	30694	BTS-3900 ±5%	Or.-Wh.-Red	Diode Load	±5%
R49	470KΩ	½	30648	BTS-470K	Yl.-Vi.-Yl.	1st Video Amp. Grid	±20%
R50	3300Ω	½	30733	BTS-3300	Or.-Or.-Red	1st Video Amp. Plate	
R51	6800Ω	½	14659	BTS-6800	Blue-Gray-Red	" " " "	
R52	820KΩ	½	30161	BTS-820K ±5%	Gray-Red-Yl.	2nd Video Amp. Grid	±5%
R53	1.2 Meg.	½	30162	BTS-1.2 Meg. ±5%	Br.-Red-Grn.	Bias Network	±5%
R54	33Ω	½	8063		Or.-Or.-Br.	2nd Video Amp. Cathode	
R55	3300Ω	1	71986	BTA-3300	Or.-Or.-Red	Voltage Dropping	
R56	10KΩ	½	3078	BTS-10K	Br.-Blk.-Or.	Sync. Isolation	
R57	100KΩ	½	3252	BTS-100K	Br.-Blk.-Yl.	Picture Tube Grid	±20%
R58	1 Meg.	½	30652	BTS-1 Meg.	Br.-Blk.-Grn.	Diode Load	±20%
R59	47KΩ	½	30787	BTS-47K	Yl.-Vi.-Or.	Bias Network	
R60	150KΩ	½	30493	BTS-150K	Br.-Grn.-Yl.	" " "	
R61	10Ω	½	34765		Br.-Blk.-Br.	1st Sound IF Cathode	±20%
R62	1000Ω	½	34766	BTS-1000	Br.-Blk.-Red	1st Sound IF Decoupling	±20%
R63	470KΩ	½	30648	BTS-470K	Yl.-Vi.-Yl.	2nd Sound IF Grid	±20%
R64	10Ω	½	34765		Br.-Blk.-Br.	2nd Sound IF Cathode	±20%
R65	3300Ω	½	30733	BTS-3300	Or.-Or.-Red	2nd Sound IF Screen	±20%
R66	1000Ω	½	34766	BTS-1000	Br.-Blk.-Red	2nd Sound IF Plate	±20%
R67	22KΩ	½	30492	BTS-22K	Red-Red-Or.	3rd Sound IF Grid	
R68	10KΩ	1	71914	BTA-10K	Br.-Blk.-Or.	Voltage Dropping	
R69	10KΩ	½	3078	BTS-10K	Br.-Blk.-Or.	Bleeder	
R70	100KΩ	½	3252	BTS-100K	Br.-Blk.-Yl.	Diode Load	
R71	100KΩ	½	3252	BTS-100K	Br.-Blk.-Yl.	" "	
R72	22KΩ	½	30492	BTS-22K	Red-Red-Or.	De-emphasis	±20%
R73	2.2Ω	1	71918	BW-½-2.2		Filament Dropping	
R74	10 Meg.	½	30992	BTS-10 Meg.	Br.-Blk.-Blue	1st Audio Grid	±20%
R75	330KΩ	½	14983	BTS-330K	Or.-Or.-Yl.	1st Audio Plate	±20%
R76	270KΩ	½	30651	BTS-270K	Red-Vi.-Yl.	Audio Output Grid	
R77	220KΩ	2	34769	BT-2-2200	Red-Red-Red	Filter	±20%
R78	220KΩ	2	34769	BT-2-2200	Red-Red-Red	"	±20%
R79	6.8 Meg.	½	31071	BTS-6.8 Meg.	Blue-Gray-Grn.	Bias Network	
R80	1 Meg.	½	30652	BTS-1 Meg.	Br.-Blk.-Grn.	1st Sync. Amp. Grid	±20%
R81	4700Ω	1	71987	BTA-4700	Yl.-Vi.-Red	1st Sync. Amp. Plate	
R82	4700Ω	1	71987	BTA-4700	Yl.-Vi.-Red	" " " "	
R83	1 Meg.	½	30652	BTS-1 Meg.	Br.-Blk.-Grn.	Sync. Sep. Grid	
R84	4.7 Meg.	½	30931	BTS-4.7 Meg.	Yl.-Vi.-Grn.	Bias Network	
R85	6800Ω	½	14659	BTS-6800	Blue-Gray-Red	1st Sync. Amp. Plate	
R86	1 Meg.	½	30652	BTS-1 Meg.	Br.-Blk.-Grn.	2nd Sync. Amp. Grid	±20%
R87	4700Ω	½	30494	BTS-4700	Yl.-Vi.-Red	2nd Sync. Amp. Plate	
R88	100KΩ	½	34766	BTS-100K	Br.-Blk.-Red	Decoupling	
R89	22KΩ	½	30492	BTS-22K	Red-Red-Or.	Differentiator	±20%
R90	22KΩ	½	30492	BTS-22K	Red-Red-Or.	Integrator	±20%
R91	8200Ω	½	14250	BTS-8200	Gray-Red-Red	"	
R92	8200Ω	½	14250	BTS-8200	Gray-Red-Red	"	
R93	1.5 Meg.	½	31449	BTS-1.5 Meg. ±5%	Br.-Grn.-Grn.	Vert. Osc. Grid	±5%
R94	220KΩ	½	14583	BTS-220K	Red-Red-Yl.	Vert. Osc. Plate	
R95	100KΩ	½	3252	BTS-100K	Br.-Blk.-Yl.	Voltage Divider	
R96	2.2 Meg.	½	30649	BTS-2.2 Meg.	Red-Red-Grn.	" "	
R97	2.2 Meg.	½	30649	BTS-2.2 Meg.	Red-Red-Grn.	Vert. Output Grid	
R98	56KΩ	½	30650	BTS-56K	Grn.-Blue-Or.	Vert. Osc. Plate	
R99	8200Ω	½	14250	BTS-8200 ±5%	Gray-Red-Red	Peaking	±5%
R100	1800Ω	½	71512	BTS-1800	Br.-Gray-Red	Vert. Output Cathode-See Note 2	
R101	10KΩ	1	71914	BTA-10K	Br.-Blk.-Or.	Vert. Output Plate	±20%
R102	470KΩ	½	30648	BTS-470K	Yl.-Vi.-Yl.	Diode Load	
R103	470KΩ	½	30648	BTS-470K	Yl.-Vi.-Yl.	" "	
R104	1 Meg.	½	30652	BTS-1 Meg.	Br.-Blk.-Grn.	" "	
R105	470KΩ	½	30648	BTS-470K	Yl.-Vi.-Yl.	AFC Grid	±20%
R106	560Ω	½	5164	BTS-560	Grn.-Blue-Br.	AFC Grid Current Limiting	
R107	1Ω	½	34761		Br.-Blk.-Blk.	AFC Cathode	±5%
R108	27KΩ	1	71990	BTA-27K	Red-Vi.-Or.	Bleeder	
R109	39KΩ	1	71084	BTA-39K	Or.-Wh.-Or.	AFC Screen Dropping	
R110	47KΩ	1	71988	BTA-47K ±5%	Yl.-Vi.-Or.	AFC Plate	±5%
R111	39KΩ	1	71084	BTA-39K ±5%	Or.-Wh.-Or.	AFC Plate	±5%
R112	27KΩ	½	30409	BTS-27K	Red-Vi.-Or.	Horiz. Osc. Grid	
R113	10KΩ	1	71914	BTA-10K	Br.-Blk.-Or.	Horiz. Osc. Screen	
R114	5000Ω	5	71861	AB-5000		Horiz. Osc. Plate	
R115	6800Ω	½	14659	BTS-6800	Blue-Gray-Red	Differentiator	
R116	220KΩ	½	14583	BTS-220K	Red-Red-Yl.	Horiz. Discharge Grid	±20%
R117	680KΩ	½	30562	BTS-680K ±5%	Blue-Gray-Yl.	Horiz. Discharge Plate	±5%
R118	6800Ω	½	14659	BTS-6800	Blue-Gray-Yl.	Peaking	
R119	470KΩ	½	30648	BTS-470K	Yl.-Vi.-Yl.	Horiz. Output Grid	
R120	10Ω	1	70715		Br.-Blk.-Br.	Horiz. Output Cathode	
R121	22KΩ	1	71989	BTA-22K	Red-Red-Or.	Horiz. Output Screen	
R122	18KΩ	1		BTA-18K	Br.-Gray-Or.	" " "	
R123	6300Ω	20	71439			Damping-See Note 3	
R124	1 Meg.	1	71993	BTA-1 Meg.	Br.-Blk.-Grn.	Hi. Volt. Filter	
R125	1800Ω	1	71512	BTA-1800	Br.-Gray-Red	Focus Coil Shunt	
R126	270Ω	2	71511	BW-2-270	Red-Vi.-Br.	" " "	
R127A	1360Ω	17	71458			Bleeder Network	
B	230Ω	10				" "	
R128A	6750Ω	3.2	71459			" "	
B	12Ω	½				" "	
C	93Ω	4				" "	
R129	56Ω	1	71992	BW-1-56	Grn.-Blue-Blk.	Ion Trap Coil Shunt	
R130	3.3Ω	½	71513	BW-½-3.3 ±5%	Or.-Or.-Gold	Hi Volt. Rect. Filament	±5%
R131	10KΩ	½		BTS-10K	Br.-Blk.-Or.	Mixer Grid Coil Shunt	
R132	150KΩ	½	30493	BTS-150K	Br.-Grn.-Yl.	ACC. Anode Dropping *	
R133	27KΩ	½	30409	BTS-27K	Red-Vi.-Or.	Tone Compensation	

*Not used in all models.
Note 1-Some models use 1800Ω in this application.
Note 2-Some models use 2700Ω in this application.
Note 3-This resistor is tapped at 500Ω and 1000Ω.

PARTS LIST AND DESCRIPTION CONTINUED ON PAGE 11

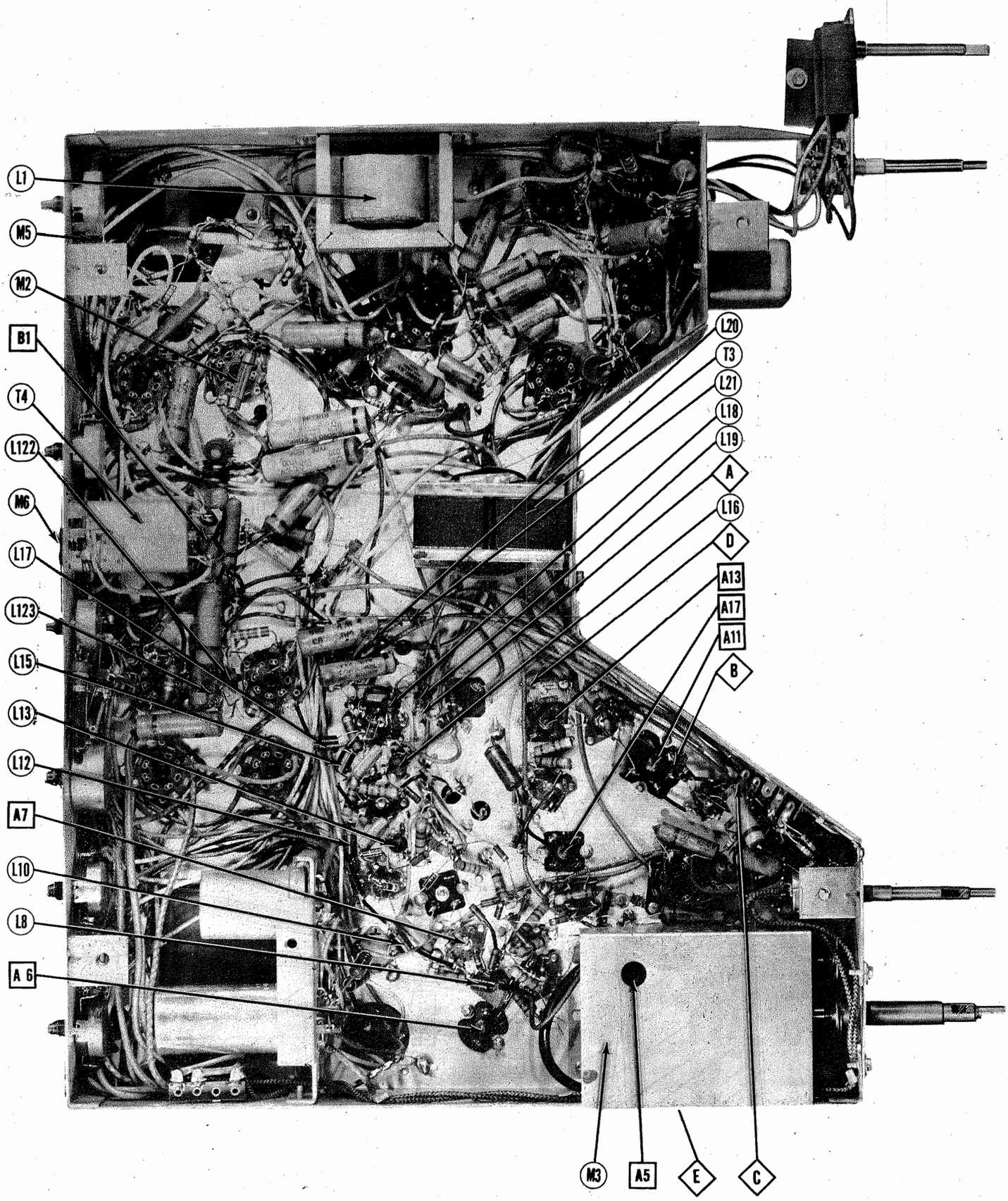

CHASSIS BOTTOM VIEW-TRANS., INDUCTOR AND ALIGNMENT IDENTIFICATION

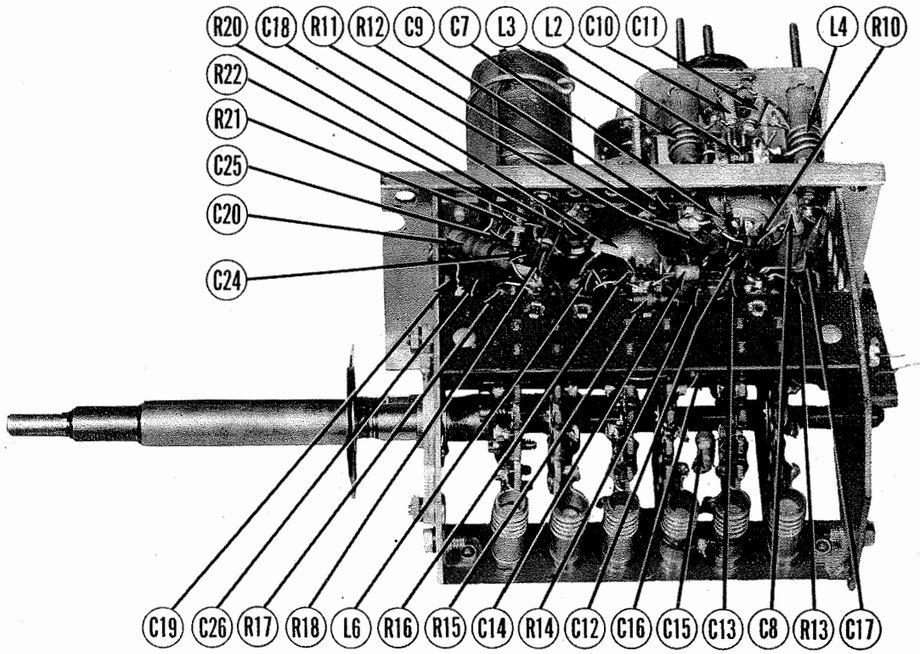

RF TUNER-RIGHT SIDE

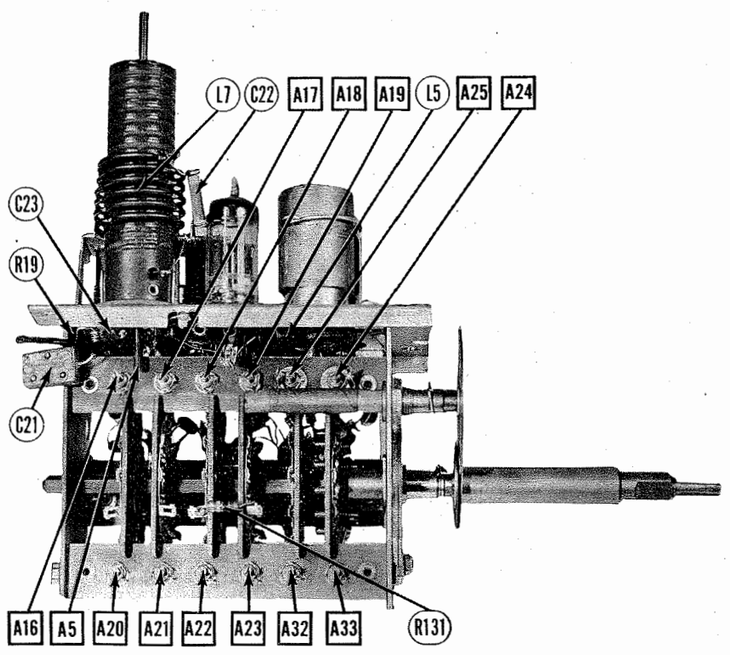

RF TUNER-LEFT SIDE

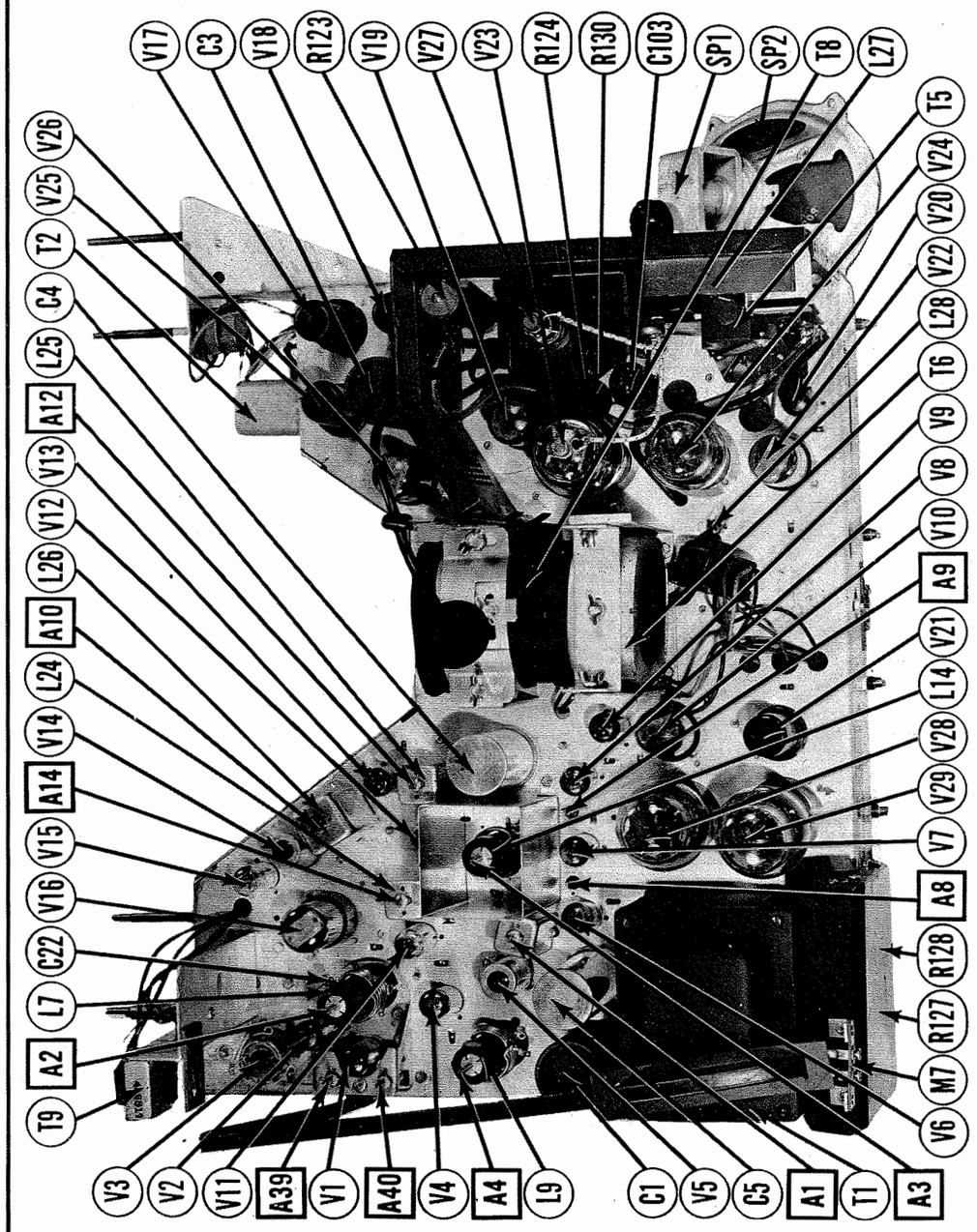

CHASSIS TOP VIEW