SERVICE DATA

TELEVISION RECEIVERS

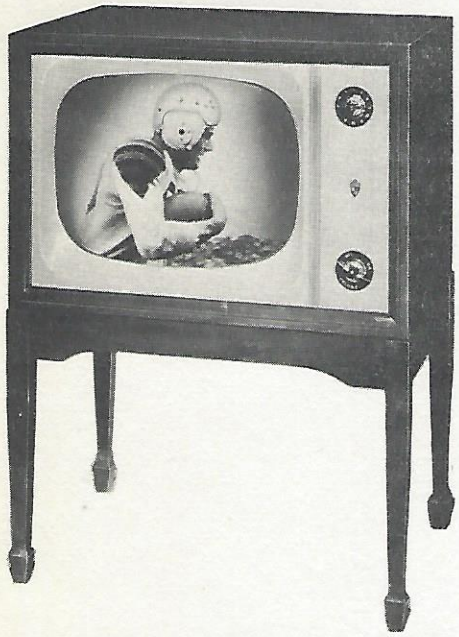

21" Model - PH302 - RM704

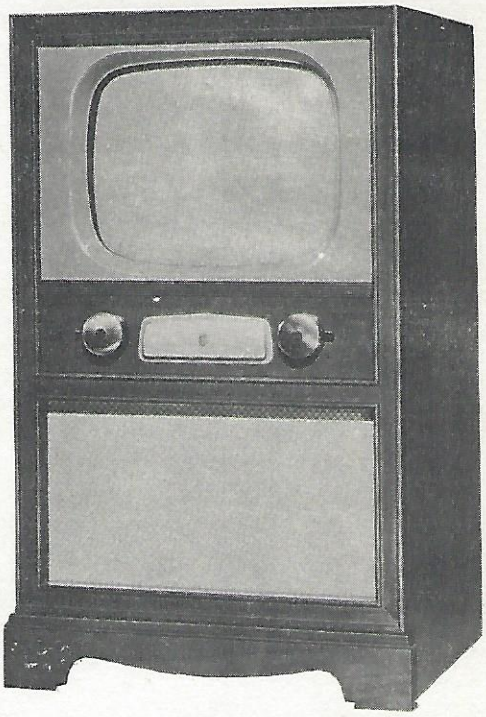

17" Model - PH303 - RM703

21" Model - PH305 - RM705

17" Model - PH304 - RM702

GENERAL INFORMATION

Models PH302 and RM704 are 20 tube table model television receivers incorporating a 21″ picture tube. It is designed in two versions, 115 volts, 25 to 60 cycles and 115 volts, 60 cycles only.

Models PH303 and RM703 are 20 tube console model television receivers incorporating a 17″ picture tube. It is designed in two versions as above.

Models PH304 and RM702 are 20 tube table model television receivers incorporating a 17″ picture tube. It is designed in two versions as above.

Models PH305 and RM705 are 20 tube console model television receivers incorporating a 21″ picture tube. It is also designed in two versions as above.

60 cycle models bear the suffix—60, following the model number.

TELEVISION ANTENNA CONNECTIONS

An antenna that is reasonably satisfactory for strong local signals in the absence of severe reflections, is built into the cabinet. When an external antenna is used it should match the receiver's input impedance, which is 300 ohms.

To service this receiver satisfactorily a good external antenna installation is needed. Make certain the transmission line is as short as possible, has 300 ohms impedance and is kept clear of all surrounding objects including the antenna mast itself by at least 6 inches. Unless the signal strength in the area of operation is at least 1000 microvolts, it is advisable to use a type of transmission line having very low attenuation.

The antenna itself should be designed to offer a good match to the 300 ohm transmission line either directly or by transformer coupling.
Disconnect the built-in antenna when using the external antenna.

For lightning protection, the antenna mast should be connected to a good ground, and the transmission line connected to an approved type of lightning arrestor, one terminal of which is grounded.

All electrical joints must be carefully made. A coating of glyptal on each joint exposed to the weather will assist in maintaining trouble-free performance over a long period of time.

TUBE COMPLEMENT

V1	6BQ7	R-F Amplifier
V2	6J6	Oscillator and Mixer
V3	6CB6	1st Video I-F Amplifier
V4	6CB6	2nd Video I-F Amplifier
V5	6CB6	3rd Video I-F Amplifier
V6	6AL5	Video Detector and A.G.C.
V7	12BY7	Video Amplifier
V8	6AU6	Sound I-F Amplifier
V9	6AL5	Ratio Detector
V10	6AT6	Audio Amplifier
V11	6Y6G	Audio Output and Voltage Regulator for 130 v supply
V12	12AU7	Sync Amplifier and Sync Separator
V13	12AU7	Sync Limiter and Vertical Block Oscillator
V14	6S4	Vertical Output
V15	6SN7GT	Horizontal Control and Horizontal Oscillator
V16	6BQ6GT	Horizontal Output
V17	6AX4GT	Damper and Booster Rectifier
V18	1B3GT	H-V Rectifier
V19	17HP4	17″ Picture Tube
V19	21FP4	21″ Picture Tube
V20	5U4G	L-V Rectifier

INTERMEDIATE FREQUENCIES: Video 26.25 Mc; Sound 21.75 Mc.

INTERCARRIER: Sound System 4.5 Mc.

SCANNING: 525 Lines, interlaced.

VERTICAL SCANNING FREQUENCY: 60 c (field frequency).

FRAME FREQUENCY: 30 c (picture repetition rate).

TELEVISION CONTROLS

Function	Location	Description
Contrast	Front Panel, Outer Shaft	Dual Knob
On-Off-Volume	Front Panel, Inner Shaft	Dual Knob
Brilliance	Rear of Chassis (Table Models)	Knob
	Front Panel (Console Models)	Knob or Knurled Shaft
Horizontal Hold	Rear of Chassis (Table Models)	Dual Knob
	Front Panel (Console Models)	Knob or Knurled Shaft
Vertical Hold	Rear of Chassis (Table Models)	Dual Knob
	Front Panel (Console Models)	Knob or Knurled Shaft
Fine Tuning	Front Panel, Outer Shaft	
Channel Selector	Front Panel, Inner Shaft	Dual Knob
Local / Normal / Fringe Switch	Rear of Chassis	Lever

Function	Location	Description
Vertical Linearity	Rear of Chassis	Knurled Shaft
Vertical Size	Rear of Chassis	Knurled Shaft
Focus	Rear of Chassis	Knurled Shaft
Horizontal Linearity	Rear of Chassis	Slider
Horizontal Size	Rear of Chassis	Slider
Horizontal Range	Rear of Chassis	Slotted Brass Screw
Horizontal Phase	Underneath Chassis	Slotted Brass Screw
Deflection Yoke Adjustment	On Yoke Assembly	Thumb Screw
Centering Rings	On Neck of Tube	Adjustable Rings
Ion Trap Magnet	On Neck of Tube	Magnet and Clamp
Tone	Front Panel (21" Console Model)	Dual Knob
Yoke Cap Balance	Inside H.V. Shield	Mica Trimmer

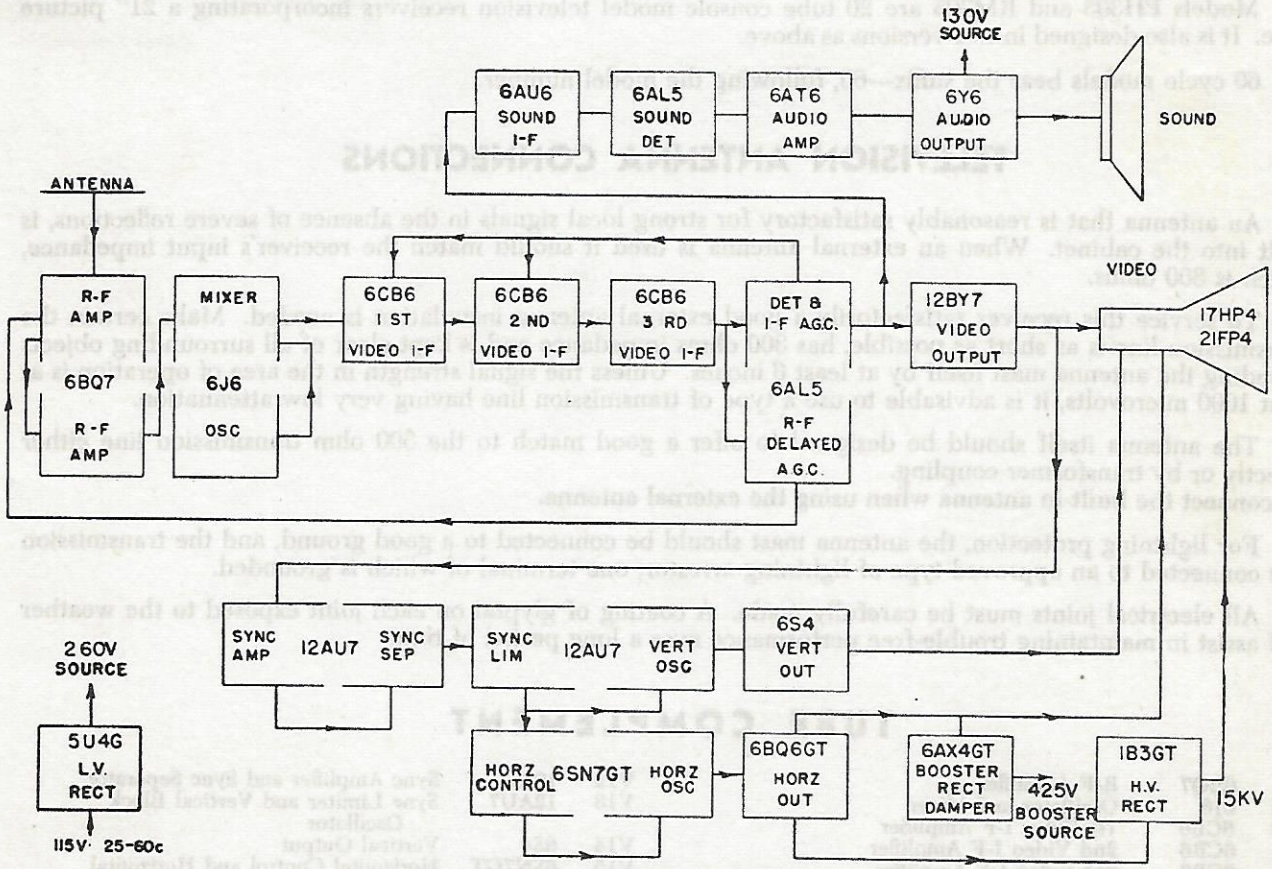

BLOCK DIAGRAM OF TELEVISION RECEIVER

HIGH VOLTAGE WARNING

Operation of the receiver chassis outside of the cabinet involves a shock hazard. An interlock in the high voltage unit disconnects the 260 volt supply to the high voltage stages when the cover of the high voltage unit is removed. The high voltage supply, while of a low current capacity, operates up to a 15,000 volt potential. Exercise all normal HIGH VOLTAGE precautions while working on this equipment.

PICTURE TUBE HANDLING WARNING

The picture tube envelope encloses a high vacuum and with the large surface area of glass involved, the stresses created are considerable. Any accidental blow or rough handling may cause the tube to implode with extreme violence. The picture tube should be handled only by qualified persons protected by heavy gloves and shatterproof goggles.

SERVICE ADJUSTMENTS

The service adjustments normally will require an occasional minor adjustment if any circuit work or tube replacement is required. A test pattern, generated either locally in the shop or obtained from a television station is recommended for best results. The operating and auxiliary controls located on the front panel (the auxiliary controls are located on the rear of the mantel sets) should be set for as good a pattern as possible before making the following adjustments.

If the picture is not properly centered remove the back cover and adjust the rings on the centering device, which is located on the neck of the tube, until the picture is recentered. If proper centering cannot be restored in this manner a slight readjustment of the deflection yoke mounting may be necessary. To obtain a clear sharply defined picture adjust the focus control.

Adjust the vertical size and horizontal size controls so that the picture fills out the dimensions of the screen. A slight readjustment of the centering device may then be necessary.

Adjust the horizontal linearity and vertical linearity adjustments for a symmetrical pattern. A slight readjustment of the vertical size and horizontal size controls may then be necessary.

NOTE—The sequence of "non-operating" control adjustments outlined is suggested as a convenient method of approach and not an arbitrary procedure. Variations of the procedure are permitted to obtain the final result.

TO REMOVE THE CHASSIS FROM THE CABINET OF 17" MODELS

1. Remove the knobs on the front by pulling in the forward direction.
2. Remove the screws holding the back cover and set aside the cover.
3. Disconnect the speaker lead pin tips near the speaker (console models only).
4. Disconnect the leads from the built-in antenna at the terminals on the chassis.
5. Removal of the chassis may now be completed by removing the five chassis mounting bolts.

REMOVING THE 17" PICTURE TUBE

1. Remove the chassis from the cabinet by following the above procedure.
2. Disconnect the H.V. anode connector from the side of the picture tube and insure the discharge of the high voltage filter condenser by grounding this lead to the chassis.
3. Discharge the tube by connecting the anode contact on the tube to chassis.
4. Disconnect the tube socket from the base of the tube.
5. Slip the ion trap magnet from the neck of the tube.
6. Slip the centering device from the neck of the tube.
7. Remove the radiation shield (braid) from the cone of the tube.
8. Remove the mounting strap at the front rim of the tube.
9. Raise the front of the tube just far enough to clear the two picture tube mounting blocks and slip the tube forward until the neck is clear of the deflection yoke assembly.

CAUTION: If the tube fails to slip out smoothly investigate and remove the cause of the trouble. DO NOT USE FORCE.

INSTALLING AND ADJUSTING THE 17" PICTURE TUBE

1. Wrap the rubber strip around the front of the tube.
2. Position the tube so that the H.V. anode contact is locate at the left side of the tube as viewed from the screen.
3. Slip the neck of the tube through the rubber collar and deflection yoke assembly, seating the rubber strip on the two front mounting blocks.
4. Place the mounting straps around the rubber strip and tighten firmly.
5. Make certain that the rubber collar of the rear support rests firmly against and supports the cone of the tube. Loosen the 4 screws securing the support and adjust support if necessary.
6. Slip the centering device over the neck of the tube. Make certain adjusting rings are next to the deflection yoke.
7. Slip the ion trap magnet over the neck of the tube. The red dot should be uppermost with the magnet on the left side looking at the rear of the tube.
8. Replace the radiation shield (braid) assembly.
9. Connect the picture tube socket and H.V. Anode connector.
10. Turn the receiver on and allow a few minutes for heating.
11. Advance the brilliance control and set the ion trap magnet for maximum raster brilliance, backing off the brilliance control as the maximum point is approached. The ion trap magnet must be rotated about the axis of the tube as well as shifted along the neck in order to obtain the proper setting. With the

brilliance control set slightly above normal brilliance and the contrast control fully counterclockwise, adjust the focus control until the raster is sharply defined. Readjust the brilliance control for normal brilliance and touch up the ion trap magnet setting for maximum brilliance.

12. Connect the antenna and tune in a test pattern.
13. Readjust the contrast control until all the different shades of grey are clearly distinguishable on the test pattern.
14. Check the position and appearance of the test pattern. If it is off center or shadowed at the corners (electron beam striking the neck of the tube) adjust the rings on the centering device; adjust the focus control until a clear, sharply defined raster is obtained.
15. If the lines of the raster are not horizontal or square with the escutcheon, loosen the deflection yoke adjustment screw and rotate the deflection yoke until the proper condition is obtained. Tighten this adjustment.
16. Check final appearance of pattern and touch up any controls that appear necessary.

TO REMOVE CHASSIS FROM THE CABINET OF THE 21" MODELS

1. Remove the knobs on the front by pulling in the forward direction.
2. Remove the screws holding the back cover and set aside the cover.
3. Disconnect the speaker pin tips near the speaker (console only).
4. Disconnect the leads from the built-in antenna at the terminals on the chassis.
5. Disconnect H.V. Anode connector and tube socket connector from picture tube. Ground the H.V. Anode connector to chassis to insure discharge of the high voltage filter condenser. Ground the anode connection on the tube. Disconnect the grounding braid from the H.V. shield housing.
6. Disconnect yoke power plug from picture tube support.
7. Removal of chassis may now be completed by removing the four chassis mounting bolts.

REMOVING THE 21" PICTURE TUBE

1. It is first necessary to remove the chassis. Refer to section on removing the 21" chassis above.
2. Remove four bolts securing the picture tube cradle base to the cabinet and lift the assembly out of the cabinet.
3. Slip the ion trap magnet from the neck of the tube.
4. Slip the centering device from the neck of the tube.
5. Remove the mounting straps at the front rim of the tube.
6. Raise the front of the tube just far enough to clear the two picture tube mounting blocks and slip the tube forward until the neck is clear of the deflection yoke assembly. **USE EXTREME CARE. DO NOT FORCE THE TUBE.**
7. Be certain the C.R. tube is discharged to the foil shield.
8. Remove the radiation shield and save for reinstalling.

INSTALLING AND ADJUSTING THE 21" PICTURE TUBE

1. The picture tube and cradle assembly must be installed in the cabinet before replacing the chassis.
2. Slip the radiation shield over the cone of the tube.
3. The picture support and cradle assembly should be removed from the cabinet.
4. Position the tube so that the H.V. Anode contact is located at the right side of the tube as viewed from the screen.
5. Slip the neck of the tube through the rubber collar and deflection yoke assembly seating the rubber strip on the two front mounting blocks.
6. Place the mounting straps around the rubber strip and tighten firmly.
7. Make certain that the rubber collar of the rear support rests firmly against and supports the cone of the tube. Loosen the 4 screws securing the support and adjust support if necessary.
8. Slip the centering device over the neck of the tube. Make certain adjusting rings are next to the deflection yoke.
9. Slip the ion trap magnet over the neck of the tube. The red dot should be uppermost with the magnet on the left side looking at the rear of the tube.
10. Place the tube and cradle assembly in the cabinet and bolt it down.
11. Replace the chassis in the cabinet and secure it to the cabinet.
12. Connect the tube base and H.V. Anode connector to the picture tube. Connect the yoke power plug to the socket on tube support assembly. Connect the grounding braid to the H.V. shield housing.
13. Replace knobs and connect speaker leads on console models.
14. Turn the receiver on and allow a few minutes for heating.
15. Follow operation 11 to 16 of "Installing and Adjusting the 17" Picture Tube."

ADJUSTMENT OF DEFLECTION YOKE BALANCING TRIMMER C223

The yoke balancing trimmer C223 is connected in parallel with the horizontal deflection capacitor C222 and for safety precautions is located inside the H.V. unit. Adjusting this trimmer eliminates wiggle of the horizontal sweep lines which may appear at the left side of the picture of some receivers. The wiggle may be defined as a sine wave distortion of the trace line, the amplitude of the wave varying from zero up to ¼ inch. The effect is stationary and can be easily detected on the test pattern. Refer to Alignment Points diagram for location of trimmer.

HIGH VOLTAGE MEASUREMENT
CAUTION HIGH VOLTAGE

DO NOT USE HAND-HELD FLEXIBLE TEST LEADS WHEN MAKING THE FOLLOWING MEASUREMENT. KEEP THE HANDS CLEAR OF THE CIRCUIT DURING MEASUREMENT. AN 11 to 15 KV. POTENTIAL EXISTS IN THIS CIRCUIT. EXERCISE ALL NORMAL HIGH VOLTAGE PRECAUTIONS.

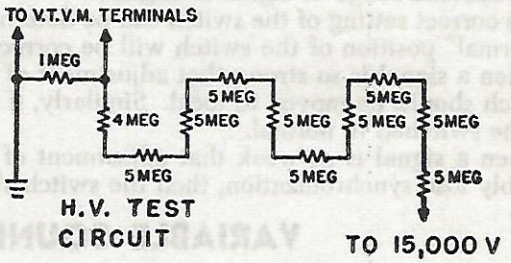

To measure the second anode potential, set the CONTRAST and BRILLIANCE controls at minimum. With the controls in this position, the resistance of the test circuit will simulate the load presented to the high voltage power supply of the picture tube. Connect a test circuit as shown. Make the resistor string self-supporting and allow adequate clearance between the resistors and chassis parts to prevent high voltage breakdown. A meter scale of 0 to 500 volts should be used. Observe the reading on the meter scale and multiply this reading by 50 to obtain the voltage across the circuit. As an example, if the V.T.V.M. reads 260 volts, the potential is 260 x 50 or 13,000 volts.

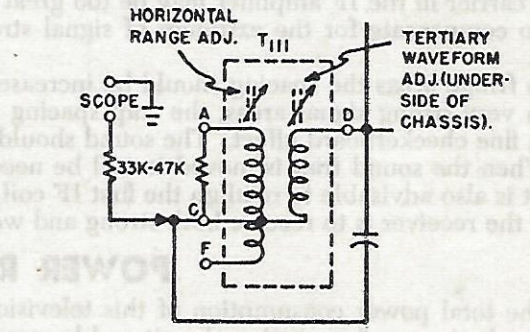

OSCILLOSCOPE CONNECTION FOR HORIZONTAL OSCILLATOR ALIGNMENT

HORIZONTAL OSCILLATOR ALIGNMENT

If the Horizontal Hold control fails to restore synchronization the Horizontal Range adjustment should be reset.

1. Tune in a weak signal. (If a weak signal is not available attenuate the available signal to approximately 100 uv at the input.)
2. Turn the Horizontal Hold control to the extreme clockwise position.
3. Adjust the Horizontal Range adjustment until a large vertical bar appears at the extreme left side of the tube. Then turn in the Horizontal Range adjustment until the vertical bar just barely disappears to the left of the tube.
4. Check the action of the Horizontal Hold control on all active channels. Repeat the above steps if necessary to maintain stable synchronization.

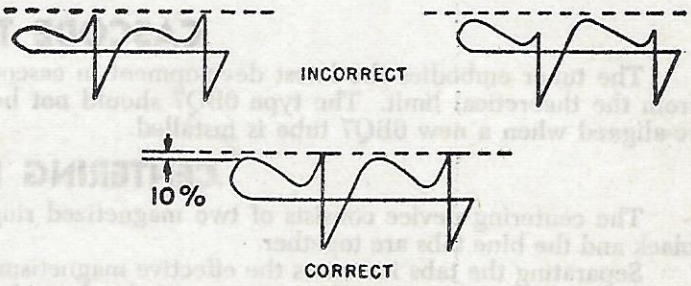

HORIZONTAL OSCILLATOR WAVEFORMS

Note: If the above procedure fails to restore stable synchronization, a waveform adjustment may be made with the aid of an oscilloscope as follows:

5. Connect the oscilloscope as shown in oscilloscope connection diagram. Adjust the phase adjustment, L202 (underside) until the sine wave is equal in amplitude to the peak of the sawtooth (waveform-diagrams), while maintaining the picture in synchronization with the Horizontal Range Adjustment.

Note: This adjustment is very important for correct operation of the circuit. If the broad peak of the wave on the oscilloscope is much lower than the sharp peak, the noise immunity becomes poorer, the

stabilizing effect of the tuned circuit is reduced and drift of the oscillator becomes more serious.

On the other hand, if the broad peak is higher than the sharp peak, the pull-in range becomes inadequate and the broad peak can cause double triggering of the oscillator when the hold control approaches the clockwise position.

6. Remove the oscilloscope and repeat step Nos. 1, 2 and 3.
7. Check the action of the Horizontal Hold control and repeat above steps as required to provide positive synchronization on all channels.
8. Adjust the deflection yoke balancing trimmer C223 for minimum raster line wiggle.

CIRCUIT FEATURES—LOCAL, NORMAL, FRINGE SWITCH

This receiver is equipped with a "Local, Normal, Fringe Switch" which enables the receiver to operate over an extreme range of signal strengths.

The correct setting of the switch can be determined by watching the synchronizing action of the receiver. The "normal" position of the switch will be correct for most locations.

When a signal is so strong that adjustment of the Contrast Control will not remove the bend at the top, the switch should be moved to local. Similarly, if the switch was in fringe position and the picture bends, it should be switched to normal.

When a signal is so weak that adjustment of the contrast control will not correct an unsteady picture or possibly lose synchronization, then the switch should be changed to fringe position.

VARIABLE SOUND TRAP ADJUSTMENT

In some extreme cases it has been found that the nominal value of 30 db (40 times) rejection of the sound carrier in the IF amplifier may be too great (in fringe areas) or too small (in local areas).

To compensate for the extremes of signal strength, the sound trap spacing on the first IF coil may be varied.

In fringe areas the spacing should be increased until adequate sound is obtained.

In very strong signal areas, the trap spacing may be reduced until sharp edges in the picture are free from a fine checkerboard effect. The sound should be checked to be sure enough sound sensitivity remains.

When the sound trap is moved it will be necessary to re-align the tuning slug associated with the trap coil. It is also advisable to re-align the first IF coil slug.

If the receiver is to receive both strong and weak signals, do not adjust the sound trap spacing.

POWER REQUIREMENTS

The total power consumption of this television receiver has been reduced to approximately 160 watts. This results in a cool operating chassis and longer component life. The power economy is obtained by using the audio output tube as a stabilized voltage dropping impedance for the low voltage B+ supply. Therefore, **the audio power amplifier tube should not be removed from its socket while the set is operating.**

CASCODE TUNER

The tuner embodies the latest development in cascode circuitry and has a noise figure only 5 to 9 db from the theoretical limit. The type 6BQ7 should not be replaced with a 6BK7, also the tuner should be re-aligned when a new 6BQ7 tube is installed.

CENTERING DEVICE

The centering device consists of two magnetized rings which cancel each other's magnetism when the black and the blue tabs are together.

Separating the tabs increases the effective magnetism and the amount of centering action. Rotating the whole centering device provides centering in the desired direction.

A NOTE REGARDING STATIC FOCUS C.R. TUBES

Arcing in the gun structure of static focus C.R. tubes is a common occurrence during the first few hours of operation. This condition which is believed to be due to the presence of dust particles and minor impurities within the gun structure, subsides as the arcing removes the cause of the breakdown.

TUNER DELAYED AGC

A separate tuner AGC voltage derived from one half of the 6AL5 video detector is applied to the RF stage.

By delaying the tuner AGC voltage, an improvement in the signal to noise ratio is obtained on weak signals. The positive voltage on the 6AL5 cathode, which controls the AGC delay, is obtained from the contrast control so that maximum delay is obtained when the contrast control is advanced to receive a weak signal.

4.5 MC TRAP ADJUSTMENT

1. Connect the low frequency signal generator through a .005 mf capacitor to TP2 at the video detector and set the frequency to 4.5 Mc.
2. Connect a crystal detector circuit and V.T.V.M. as shown in the sound alignment test circuit to the CRT cathode.
3. Adjust the contrast control to the full clockwise position.
4. Tune L112 the video tube grid 4.5 Mc trap for minimum output on the V.T.V.M.

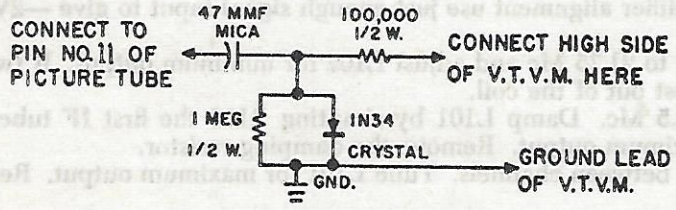

SOUND ALIGNMENT
TEST CIRCUIT

SOUND CHANNEL ALIGNMENT

1. Apply a 4.5 Mc unmodulated signal to TP2 on the video detector socket. Connect a DC V.T.V.M. to TP3, pin 7 of the ratio detector socket.
2. Adjust L241 the IF sound amplifier grid coil for maximum V.T.V.M. reading. Do not exceed 3 volts during this alignment.
3. Adjust L242, L243 the ratio detector primary (bottom) for maximum V.T.V.M. reading.
4. Set the input for a reading of —3V on the V.T.V.M.
5. Move the V.T.V.M. connection to TP4, the ratio detector audio output point.
6. Adjust L244 the ratio detector secondary (top) for —1.5V.
7. Apply approximately 30% amplitude modulation to the 4.5 Mc signal and tune L244 for minimum audio output.
   Adjustments 6 and 7 should agree closely.
8. Repeat adjustments 3, 6 and 7, until there is no interaction of one adjustment on the other.
   If a sweep generator and oscilloscope are available, the sound alignment may be checked by observing the discriminator "S" curve.

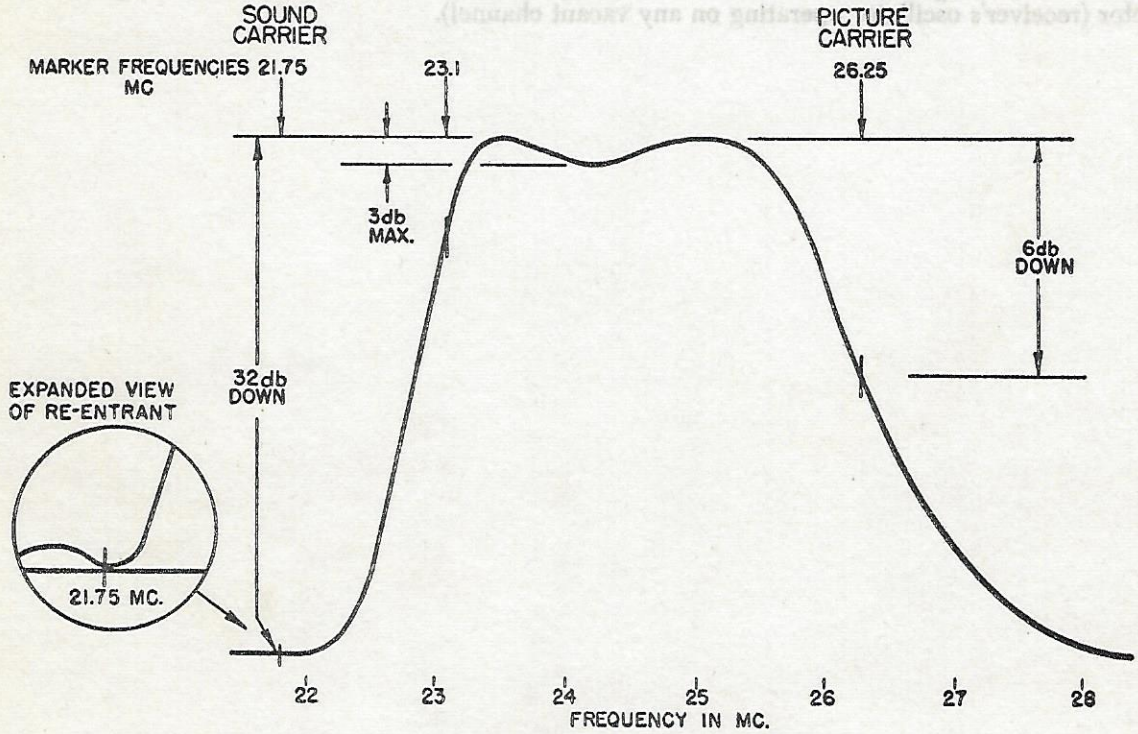

TYPICAL IF CURVE

IF AMPLIFIER ALIGNMENT

(Spot Frequency Method)

1. Place a tight fitting shield over V2, the oscillator-mixer tube and connect the ungrounded RF lead from a correctly terminated signal generator to the shield. This shield should not be grounded.
2. Connect a decoupling network consisting of a 10,000 ohm resistor in series with a 1,000 mmf capacitor between V7 pin 2 of the video tube and ground. Connect a DC V.T.V.M. across the capacitor which has one end grounded.
3. Throughout the IF amplifier alignment use just enough signal input to give —2V DC output at the video detector.
4. Set the signal generator to 21.75 Mc and adjust L102 for minimum output. If two dips are found use the one with the slug farthest out of the coil.
5. Set the generator to 24.5 Mc. Damp L101 by shunting R103 the first IF tube grid resistor with 1,000 ohms. Tune L9 for maximum output. Remove the damping resistor.
6. Set the channel selector between channels. Tune L101 for maximum output. Return the channel selector to normal.
7. Repeat steps 4 and 6 until there is not inter-action.
8. The remaining IF coils are tuned for maximum output at the frequencies specified in the chart.

ALIGNMENT FREQUENCIES

Tuner	L9	24.5 Mc	2nd IF	L103 L104	25.6 Mc
1st IF	L101	24.5 Mc	3rd IF	L105 L106	23.1 Mc
Trap on 1st IF	L102	21.75 Mc	4th IF	L107 L108	24.5 Mc

9. An indication of the IF amplifier response may be obtained by tuning the signal generator through the frequencies between 21 Mc and 27 Mc and observing the change in the V.T.V.M. reading. If the maximum reading of the V.T.V.M. is set at 2 volts the DC output should not fall below 1.5 volts over the flat portion of the curve between 23.1 Mc and 25.6 Mc. If the response is unsatisfactory, minor adjustments of the last three coils may be made to improve the curve shape. Avoid resonating the coils with the iron core near the bottom end of the coil form (Adjustment screw all the way in).
   If a sweep generator and oscilloscope are available, a visual alignment may be made after the point by point alignment to check and correct the curve shape. The video carrier at 26.25 Mc should be half way down the broad slope. The sound carrier at 21.75 Mc should fall in the sound trap hole and should be 31 to 34 db down from the flat portion of the curve (i.e., 35 to 50 times down). The average IF amplifier response when the signal is fed to the converter tube shield is 3,000 mV for —2V DC output at the video detector (receiver's oscillator operating on any vacant channel).

VOLTAGE CHART

TUBE DESIGNATION	PIN NUMBER 1	2	3	4	5	6	7	8	9
V1 6BQ7									
V2 6J6									
V3 6CB6	—0.63 —3.5	0.5 0.25	0	6.3 ac	120 132	120 132	—	—	—
V4 6CB6	—0.78 —4.0	0.6 0.9	0	6.3 ac	121 128	121 128	—	—	—
V5 6CB6	0	1.9	6.3 ac	0	124 128	124 128	—	—	—
V6 6AL5	3.1	—0.1 —4.0	0	6.3 ac	0	0	—0.1 —3.8	—	—
V7 12BY7	2.2*	—0.68 —4.0	See** Pin 9	6.3 ac	6.3 ac	0	205 225	44** 90**	2.2*
V8 6AU6	—0.33 —0.6	0	0	6.3 ac	55 60	55 60	0	—	—
V9 6AL5	—0.7 —7.0	—0.7 —7.0	6.3 ac	0	0	0	—1.2 —1.2	—	—
V10 6AT6	—0.9 —0.9	0	0	6.3 ac	0	0	50 52	—	—
V11 6Y6G	118 125	6.3 ac	248 250	240 255	110 125	118 125	0	128 140	—
V12 12AU7	115 118	—10 —16.5	0	6.3 ac	6.3 ac	33 40	—4.2 —4.0	26 46	0
V13 12AU7	95	32 38	34 40	6.3 ac	6.3 ac	135 150*	—32 —35*	0	0
V14 6S4	N.C.	22 14*	—1.3 —1.2	0	6.3 ac	—1.3 —1.2	N.C.	N.C.	390 400
V15 6SN7GT	—13 —9	165 155*	1.75 6.4	—49 —45	160 155	0	6.3 ac	0	—
V16 6BQ6GT	N.C.	6.3 ac	N.C.	150 145	—6.5 —5.8	—6.5 —5.8	0	19 23	
V17 6AX4	N.C.	N.C.	400 430	N.C.	245 262	245 262	0	6.3 ac	—
V18 1B3GT	DO NOT MEASURE								
17HP4	Pin 1	Pin 2	Pin 3, 4, 5	Pin 6	Pin 7, 8, 9	Pin 10	Pin 11	Pin 12	Anode
V19 21FP4	0	59 65*	N.C.	400*	N.C.	400 430	79 82	6.3 ac	15 KV
V20 5U4G	N.C.	280 290	N.C.	273 ac 287 ac	215 245	273 ac 287 ac	—	280 290	—

All voltages are measured to chassis and are DC positive unless otherwise marked.
All DC voltages are measured with a V.T.V.M.
Upper voltage in any square is measured under no signal conditions, the lower voltage is measured with a signal input of approximately 2500 uv.

Measurements made with controls in the following positions:
1. Volume control at minimum.
2. Contrast control at maximum.
3. Brilliance control at maximum.
4. Focus control at maximum clockwise.
5. Horizontal and Vertical controls normal.
6. Local-Normal-Fringe switch in normal position.

N.C.—No connection.

* Changes with associated control setting.

** Varies from set to set.

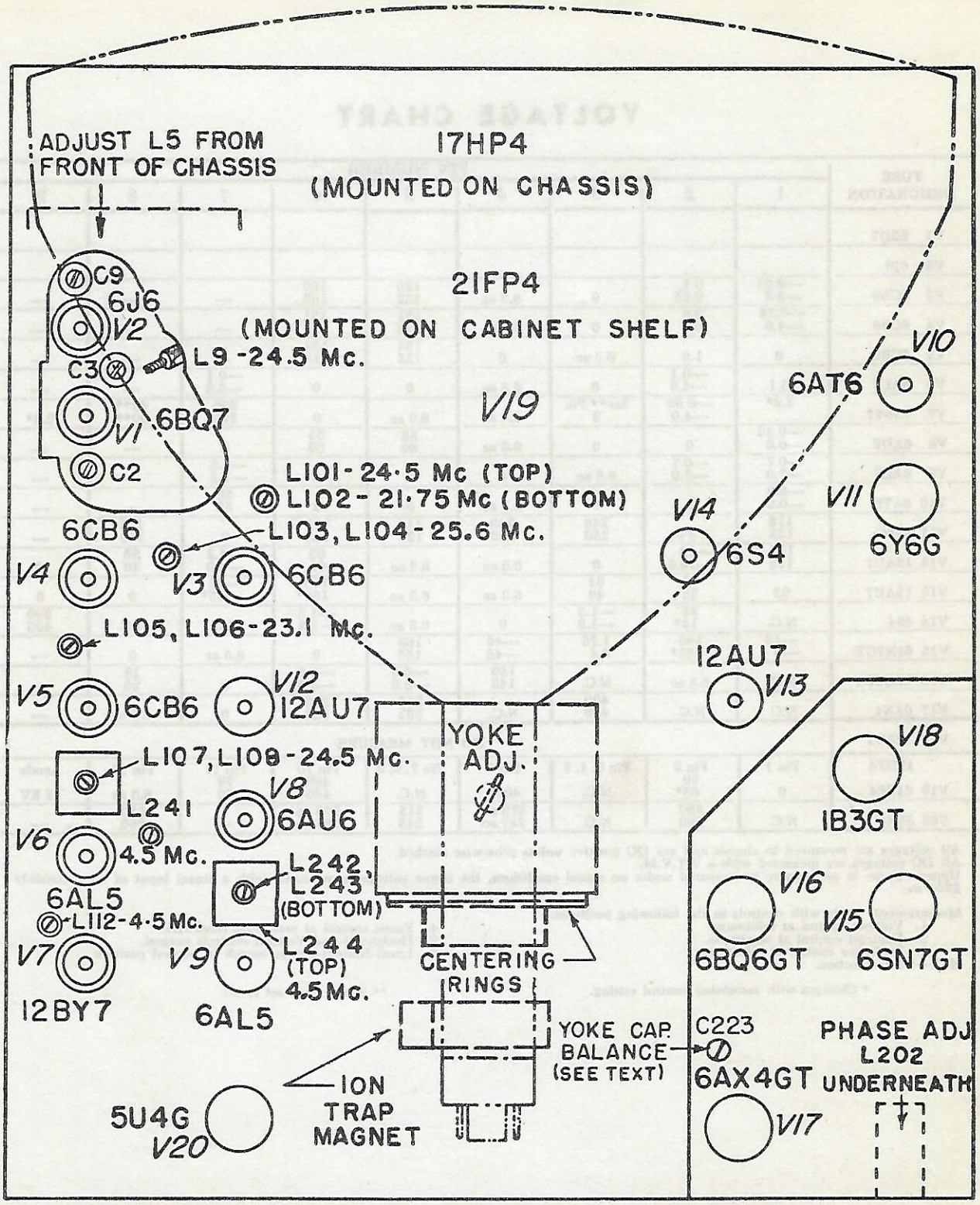

ALIGNMENT POINTS AND TUBE LOCATION

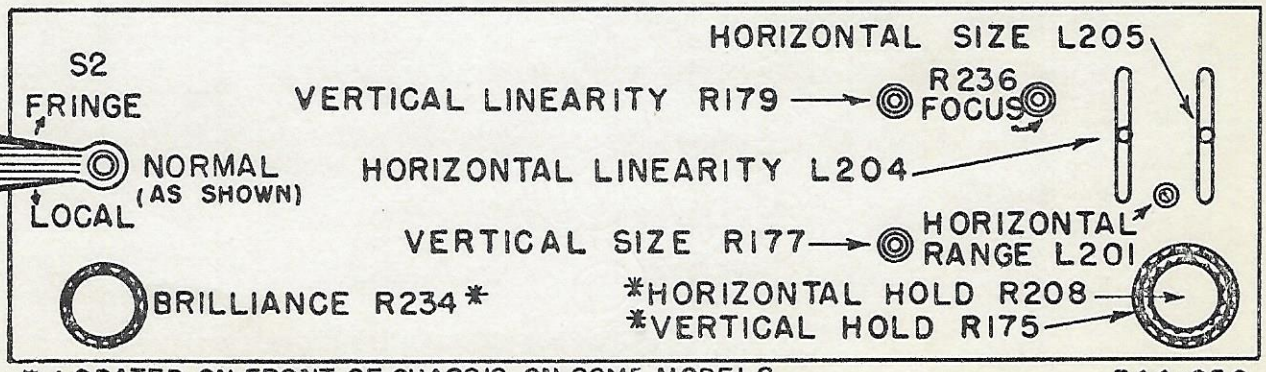

* LOCATED ON FRONT OF CHASSIS ON SOME MODELS

344-250

REAR CONTROLS

REPLACEMENT PARTS

FOR DEPENDABLE REPAIRS USE ONLY GENUINE REPLACEMENT PARTS
When ordering always state model number of receiver and description and part number of part

CAPACITORS

No.	Value	Rating	Description	Part No.
C1	3.6 mmf°	500V	Ceramic	Part of R.F. Tuner 030-129
C2	3-9 mmf		Trimmer	
C3	.5-3 mmf		Trimmer	
C4	800 mmf°	500V	Special	
C5	2.2 mmf°	500V	Ceramic	
C6	47 mmf	500V	Ceramic	
C7	1000 mmf	500V	Ceramic	
C8	47 mmf	500V	Ceramic	
C9	.5-3 mmf		Trimmer	
C10	5 mmf°	500V	Ceramic	
C11	10 mmf°	500V	Ceramic	
C12			Fine Tuning	
C13	1000 mmf	500V	Ceramic	
C14	5000 mmf	500V	Ceramic	
C15	6.8 mmf°	500V	Ceramic	
C16	300 mmf	500V	Ceramic	
C18	800 mmf		Feed Thru Type	
C19	800 mmf		Feed Thru Type	
C20	800 mmf		Feed Thru Type	
C21	800 mmf		Feed Thru Type	
C101	5000 mmf	500V	Disc Ceramic	514-011
C102	5000 mmf	500V	Disc Ceramic	514-011
C103	5000 mmf	500V	Disc Ceramic	514-011
C104	5000 mmf	500V	Disc Ceramic	514-011
C105	68 mmf	500V	Ceramic—Part of L106	060-149
C106	.5 mf	150V	Tubular Midget	515-006
C107	5000 mmf	500V	Disc Ceramic	514-011
C108	5000 mmf	500V	Disc Ceramic	514-011
C109	.1 mf	150V	Tubular Midget	515-009
C110	10 mmf	500V	Ceramic	514-154
C111	5000 mmf	500V	Disc Ceramic	514-011
C112	5 mmf ±1%	500V	Moulded	517-952
C113	5 mmf ±1%	500V	Moulded	517-952
C114	10 mf	300V	Part of Dual Electrolytic	516-546
C115	27 mmf ±5%	500V	Silver Mica—Part of L112	060-190
C116	.47 mf	200V	Tubular	515-483
C117	10 mf	350V	Electrolytic	516-059
C118	22 mmf	500V	Ceramic	514-158
C119	5000 mmf	500V	Disc Ceramic	514-011
C120	5000 mmf	500V	Disc Ceramic	514-011
C151	.047 mf	400V	Tubular	515-521
C152	150 mmf	500V	Ceramic	514-571
C153	.047 mf	200V	Tubular	515-471
C154	.0022 mf	600V	Tubular	515-555
C155	.47 mf	200V	Tubular	515-483
C171	.002 mf	500V	Part of Vertical Integrating Network	519-503
C172	.005 mf	200V		
C173	.005 mf	500V		
C174	1000 mmf	500V	Ceramic	514-178
C175	5000 mmf	500V	Disc Ceramic	514-011
C176	6800 mmf	500V	Ceramic	514-138
C177	.047 mf	600V	Tubular	515-571
C178	.1 mf	600V	Tubular	515-575
C179	80 mf	50V	Part of 4 Sect. Electrolytic	516-547
C180	.047 mf	400V	Tubular	515-521
C181	.01 mf	400V	Tubular	515-513
C182	.01 mf	600V	Tubular	515-563
C201	120 mmf	500V	Ceramic	514-570
C202	180 mmf	500V	Ceramic	514-572
C203	82 mmf	500V	Ceramic	514-568
C204	.047 mf	200V	Tubular	515-471
C205	.047 mf	400V	Tubular	515-521
C206	.022 mf	200V	Tubular	515-467
C207	.47 mf	200V	Tubular	515-483
C208	330 mmf°	500V	Mica	701-149
C209	.01 mf	600V	Tubular	515-563
C210	82 mmf	500V	Ceramic	514-568
C211	33 mmf	500V	Ceramic	514-513
C212	820 mmf°	500V	Mica	701-159
C213	10 mf	300V	Part of 4 Sect. Electrolytic	516-547
C214	3300 mmf°	500V	Mica	512-443
C215	.1 mf	400V	Tubular	515-525
C216	10 mf	50V	Part of 4 Sect. Electrolytic	516-547
C217	.047 mf	400V	Tubular	515-521
C218	.047 mf	400V	Tubular	515-521
C219	10 mf	500V	Part of 4 Sect. Electrolytic	516-547
C220	.1 mf	400V	Tubular	515-525
C221	500 mmf	20,000V	H.V. Type Ceramic	519-020
C222	°39 mmf	2000V	Ceramic (on Yoke Assembly)	514-028
	°22 mmf on later sets			°514-029
C223	7.5-50 mmf		Trimmer	511-056
C241	6.8 mmf	500V	Ceramic	517-976
C243	10,000 mmf	500V	Disc Ceramic	514-012
C244	10,000 mmf	500V	Disc Ceramic	514-012
C245	82 mmf	500V	Ceramic—Part of L243	060-175
C246	5 mf	50V	Electrolytic	516-057
C247	390 mmf	500V	Ceramic	514-576
C248	3900 mmf	500V	Ceramic	514-135
C249	.01 mf	200V	Tubular	515-463
C250	.01 mf	200V	Tubular	515-463
C251	.0056 mf	600V	Tubular	515-560
C252	.22 mf	400V	Tubular	515-529
C253	.01 mf	400V	Tubular	515-513
C254	10 mf	350V	Part of 4 Sect. Electrolytic	516-548
C255	60 mf	200V		
C256	60 mf	200V		
C257	.0047 mf	1000V	Tubular	515-031
C258	.0047 mf	600V	Tubular—PH305 Only	515-558
C261	.01 mf	600V	Tubular	515-563
C262	.01 mf	600V		
C263	100 mf	400V	Part of Dual Electrolytic	516-546
C264	100 mf	400V	Part of 4 Sect. Electrolytic	516-548
FOR 60 CYCLE VERSIONS				
C254	10 mf	350V	Part of 4 Sect. Electrolytic	516-551
C255	50 mf	200V		
C256	50 mf	200V		
C264	50 mf	400V		
C114	10 mf	300V	Part of Dual Electrolytic	516-550
C263	50 mf	400V		

RESISTORS

No.	Value	Rating	Description	Part No.
R1	15,000 ohms°	½ w	Part of R.F. Tuner	030-129
R2	47,000 ohms°	½ w		
R3	100,000 ohms°	½ w		
R4	160,000 ohms°	½ w		
R5	100,000 ohms°	½ w		
R6	1500 ohms°	½ w		
R7	10,000 ohms°	½ w		
R8	220,000 ohms°	½ w		
R9	10,000 ohms°	½ w		
R10	3,300 ohms°	½ w		
R11	10,000 ohms°	½ w		
R101	3300 ohms	1 w		502-731
R102	100 ohms	½ w		501-713
R103	4700 ohms°	½ w		501-633
R104	47 ohms°	½ w		501-609
R105	12,000 ohms°	½ w		501-638
R106	150 ohms	½ w		501-715
R107	100 ohms	½ w		501-713
R108	47 ohms°	½ w		501-609
R109	12,000 ohms°	½ w		501-638
R110	150 ohms	½ w		501-715
R111	100 ohms	½ w		501-713
R112	100 ohms	½ w		501-713
R113	180 ohms°	½ w		501-616
R114	1 Megohm	½ w		501-761
R115	820,000 ohms°	½ w		501-660
R116	820,000 ohms°	½ w		501-660
R117	56,000 ohms°	½ w		501-646
R118	3300 ohms°	½ w		501-631
R119	15,000 ohms°	½ w	Part of L110	070-253
R120	2200 ohms	½ w		501-729
R121	56 ohms°	½ w		501-610
R122	56 ohms°	½ w		501-610
R123	1500 ohms		Contrast Control—Part of	506-033
R124	27,000 ohms°	1 w		502-642
R125	150,000 ohms°	½ w		501-651
R126	10,000 ohms°	½ w	Part of L111	070-254
R127	8200 ohms°	½ w	Part of L113	070-255
R128	5600 ohms°	2 w		503-334
R129	1800 ohms°	1 w		502-628
R130	12,000 ohms°	½ w		501-638
R131	47,000 ohms	½ w		501-745
R151	10,000 ohms	½ w		501-737
R152	2.2 Megohms	½ w		501-765
R153	470,000 ohms	½ w		501-757
R154	12,000 ohms°	½ w		501-638
R155	270,000 ohms°	½ w		501-654
R156	560,000 ohms°	½ w		501-658
R157	56,000 ohms°	½ w		501-646
R158	47,000 ohms	½ w		501-745
R159	5600 ohms°	½ w		501-634
R160	2700 ohms°	½ w		501-630
R161	2700 ohms°	½ w		501-630
R171	22,000 ohms	½ w	Part of Vertical Integrating Network	519-503
R172	8200 ohms	½ w		
R173	8200 ohms	½ w		
R174	820,000 ohms°	½ w		501-660
R175	1 Megohm		Vertical Hold Control—Part of	506-032
R176	1 Megohm	½ w		501-761
R177	2.5 Megohms		Vertical Size Control	505-054
R178	8200 ohms°	½ w		501-636
R179	5000 ohms		Vertical Linearity Control	505-055
R180	1000 ohms	½ w		501-725
R181	1 Megohm	½ w		501-761
R182	680 ohms°	½ w		501-623

° Tolerance ±10% Tolerances greater than ±10% not shown.

RESISTORS — Continued

No.	Value	Rating	Description	Part No.
R183	4700 ohms	½ w		501-733
R184	560 ohms*	½ w	(On Yoke Assembly)	501-622
R185	560 ohms*	½ w	(On Yoke Assembly)	501-622
R201	330,000 ohms*	½ w		501-655
R202	820,000 ohms*	½ w		501-660
R203	82,000 ohms*	½ w		501-648
R204	330,000 ohms*	½ w		501-655
R205	3900 ohms*	½ w		501-632
R206	150,000 ohms*	½ w		501-651
R207	68,000 ohms*	½ w		501-647
R208	50,000 ohms		Horizontal Hold Control—Part of	506-032
R209	47,000 ohms*	½ w		501-645
R210	330,000 ohms*	½ w		501-655
R211	8200 ohms*	½ w		501-636
R212	47,000 ohms*	½ w		501-645
R213	47,000 ohms*	½ w		501-645
R214	470,000 ohms*	½ w		501-657
R215	100 ohms	½ w		501-713
R216	330 ohms*	2 w		503-319
R217	12,000 ohms*	2 w		503-338
R218	3.3 ohms*	½ w		501-824
R219	2200 ohms*	½ w		501-629
R220	1 Megohm	½ w		501-761
R221	820 ohms*	1 w		502-624
R231	100,000 ohms	½ w		501-749
R232	39,000 ohms*	½ w		501-644
R234	50,000 ohms		Brilliance Control	505-058
R235	47,000 ohms*	½ w		501-645
R236	1 Megohm		Focus Control	505-062
R241	100,000 ohms	½ w		501-749
R242	22,000 ohms	½ w		501-741
R243	15,000 ohms*	½ w		501-639
R244	47,000 ohms*	½ w		501-645
R245	1 Megohm		Volume Control—Part of	506-033
R246	39,000 ohms*	½ w		501-644
R247	10 Megohms*	½ w		501-773
R248	330,000 ohms*	½ w		501-655
R249	330 ohms*	½ w		501-619
R250	100,000 ohms*	½ w		501-649
R251	390,000 ohms*	½ w		501-656
R252	120,000 ohms*	½ w		501-650
R253	150 ohms*	2 w		503-315
R254	700,000 ohms		Tone Control (PH305)—Part of	506-031
R261	100,000 ohms*	½ w		501-649

* Tolerance ±10%

Tolerances greater than ±10% not shown.

INDUCTORS

No.	Description	Part No.
L1, L2	Antenna Coil Assembly (Part of R.F. Tuner)	030-129
L3, L4, L5	Oscillator and Mixer Coil Assembly (Part of R.F. Tuner)	030-129
L6	Neutralizing Coil (Part of R.F. Tuner)	030-129
L7	Heater Choke (Part of R.F. Tuner)	030-129
L8	Heater Choke (Part of R.F. Tuner)	030-129
L9	Tuner, I.F. Output Coil (Part of R.F. Tuner)	030-129
L10	Coupling Inductor (Part of R.F. Tuner)	030-129
L11	Parasitic Choke (Part of R.F. Tuner)	030-129
L101, L102	1st Video I.F. Transformer and Sound Trap	060-195
L103, L104	2nd Video I.F. Transformer	060-148
L105, L106	3rd Video I.F. Transformer	060-148
L107, L108	4th Video I.F. Transformer	060-176
L109	I.F. Filter Choke	070-256
L110	Peaking Coil and R119 (Blue —85 uh + 15k)	070-253
L111	Peaking Coil and R126 (Black —240 uh + 10k)	070-254
L112	4.5 Mc Sound Trap	060-190
L113	Peaking Coil and R127 (Orange —150 uh + 8.2k)	070-255
L151, L152	Vertical Blocking Oscillator Transformer	050-193
L153, L154	Vertical Output Transformer	050-194
L155, L156	Vertical Deflection Coil, 17"—Part of	060-177
	Vertical Deflection Coil, 21"—Part of	060-185
L201, L202	Horizontal Blocking Oscillator Transformer	060-174
L204	Horizontal Linearity Coil	060-173
L205	Horizontal Size Coil	060-172
L206 to L211	Horizontal Output Transformer	050-200
L212, L213	Horizontal Deflection Coil, 17"—Part of	060-177
	Horizontal Deflection Coil, 21"—Part of	060-185
L241	4.5 Mc Sound Take-Off Coil	060-191
L242 to L244	Ratio Detector	060-175
L245, L246	Audio Output Transformer	050-201
L247	Voice Coil of Speaker	
L261, L262, L263	Heater Power Transformer	050-198
L264, L265, L266	High Voltage Power Transformer	050-199
L267	Filter Choke, 5.5 H.	050-206
FOR 60 CYCLE VERSIONS		
L261 to L266	Power Transformer	050-205

MISCELLANEOUS PARTS

	Standard Coil Tuner Cascode	130-129
	Ion Trap Magnet	130-140
	Centering Device Electrostatic	130-139
L155, L156, L212, L213	Deflection Yoke Assembly, 17"	060-177
	Deflection Yoke Assembly, 21"	060-185
L247	Speaker, P.M., 5" x 7", Z=3.2 ohms—Mantel	041-145
	Speaker, P.M., 8", Z=3.7 ohms—Console	041-138
S1	On-Off Switch—Part of R245	
S2	Local-Normal-Fringe Switch	080-142
S3	Interlock Switch	080-143
	Silver Vortex Antenna	570-216

MODIFICATIONS TO MODELS PH303 AND RM703

No.	Value	Description	Part No.
R175	1 Megohm	Vertical Hold Control	505-060
R208	50,000 ohms	Horizontal Hold Control	505-061
R234	50,000 ohms	Brilliance Control	505-061

MODIFICATIONS TO MODEL PH305 AND RM705

No.	Value	Description	Part No.
R175	1 Megohm	Vertical Hold Control	-
R208	50,000 ohms	Horizontal Hold Control	506-025
R234	50,000 ohms	Brilliance Control	506-031
R254	70,000 ohms	Tone Control	506-031

MODIFICATIONS TO 60 CYCLE MODELS

C114	10 mf, 300V	Dual Electrolytic	516-550
C263	50 mf, 400V	Dual Electrolytic	516-550
C254	10 mf, 350V	4 Section Electrolytic	516-551
C255	50 mf, 200V	4 Section Electrolytic	516-551
C256	50 mf, 200V	4 Section Electrolytic	516-551
C264	50 mf, 400V	4 Section Electrolytic	516-551

No.	Description	Part No.
C117	Removed	
R129	Removed	
L261-L266	Power Transformer (Single Assembly)	050-205

MISCELLANEOUS PARTS

Models PH302, PH303, PH304, PH305

Part No.	Description	Part No.	Description
070-216	Antenna, Silver Vortex	120-930	Socket Assembly, E.H.T.
121-162	Antenna, Panel Mounting Plate Assembly	080-143	Switch, Safety, Spring Action
571-227	Connector and Lead, E.H.T.	301-339	Spring, Clip, Core Guide
301-346	Deflection Yoke Bracket	301-531	Spring, Tube Grounding
301-354	Deflection Yoke Support Bracket	570-001	Tube Socket, Octal, 1-5/16" Mounting
632-018	Grommet, Rubber	570-031	Tube Socket, Octal, 1½" Mounting
130-149	Ion Trap Magnet	570-018	Tube Socket, 7 Prong Miniature, 8 Contact
572-211	Knob, Fine Tuning	570-020	Tube Socket, 9 Prong Miniature, 8 Contact
572-212	Knob, Volume, On-Off	644-504	Tube Shield, 1⅜" Long
572-213	Knob, Contrast	644-509	Tube Shield, 1¾" Long
572-206	Knob, Local-Distant	325-071	Tube Mounting Collar
330-003	Philips Crest	644-506	Tube Shield Base
080-142	Switch, Local-Distant	644-508	Tube Shield Base, ⅞" Diameter

Model PH302 only

121-183	Back Cover Assembly	571-119	Connector, EBY, 5 Contact
303-335	Bottom Cover, Pressboard	571-105	Contact, EBY
592-101	Braid Shielding, 3/16"	572-214	Knob, Channel Selector
030-389	Cabinet, Walnut	572-208	Knob, Dual Large, Vertical Hold
030-390	Cabinet, Mahogany	572-209	Knob, Dual Small, Horizontal Hold
030-391	Cabinet, Blonde	572-207	Knob, Brilliance
110-448	C.R.T. Strap Assembly, 21" R.H.	100-061	Line Cord and Plug POT 1/64 8 Feet
110-449	C.R.T. Strap Assembly, 21" L.H.	110-466	Ornamental Strip and Screw Assembly
303-334	C.R.T. Rubber Cushion	332-683	Panel, Window 21"
301-537	C.R.T. Bracket	571-118	Plug, EBY, 60-5 m.
060-185	C.R.T. Deflection Yoke	041-145	Speaker, P.M., 5" x 7"
121-188	C.R.T. Yoke and Mounting Board Assembly	301-573	Speaker Mounting Bracket
332-684	C.R.T. Metal Mask, 21"	300-712	Tube Retainer Spring
570-039	C.R.T. Socket Assembly	303-333	Tube Retainer, Bakelite

Model PH303 only

121-181	Back Cover Assembly	332-677	C.R.T. Metal Mask
030-386	Cabinet, Walnut	570-037	C.R.T. Socket Assembly
030-387	Cabinet, Mahogany	332-679	Escutcheon, Trap Door
030-388	Cabinet, Blonde	301-477	Ground Strap, Braid
110-444	C.R.T. Strap Assembly, 17" R.H.	572-210	Knob, Channel Selector
110-445	C.R.T. Strap Assembly, 17" L.H.	100-003	Line Cord and Plug POSJ 1/32 8 Feet
303-270	C.R.T. Rubber Cushion	110-467	Ornamental Strip and Screw Assembly
301-537	C.R.T. Bracket	332-678	Panel, Window 17"
060-177	C.R.T. Deflection Yoke	609-201	Plug, Button
313-038	C.R.T. Support Block	310-052	Spring, Dial Cord
121-164	C.R.T. Yoke Mounting Bracket Assembly	041-138	Speaker, 8" P.M., Philips 9746X

Model PH304 only

121-178	Back Cover Assembly	570-037	C.R.T. Socket Assembly
030-379	Cabinet, Walnut	301-477	Ground Strap (Braid)
030-380	Cabinet, Mahogany	572-210	Knob, Channel Selector
030-381	Cabinet, Blonde	572-208	Knob, Dual Large, Vertical Hold
110-444	C.R.T. Strap Assembly, 17" R.H.	572-209	Knob, Dual Small, Horizontal Hold
110-445	C.R.T. Strap Assembly, 17" L.H.	572-207	Knob, Brilliance
303-270	C.R.T. Rubber Cushion	100-061	Line Cord and Plug POT 1/64 8 Feet
301-537	C.R.T. Bracket	110-466	Ornamental Strip and Screw Assembly
060-177	C.R.T. Deflection Yoke	332-676	Panel, Window 17"
313-038	C.R.T. Support Block	041-145	Speaker, P.M., 5" x 7"
121-164	C.R.T. Yoke Mounting Bracket Assembly	301-573	Speaker Mounting Bracket
332-675	C.R.T. Metal Mask	310-052	Spring, Dial Cord

Model PH305 only

121-189	Back Cover Assembly	571-119	Connector, EBY, 5 Contact
303-335	Bottom Cover, Pressboard	571-105	Contact, EBY
592-101	Braid, Shielding, 3/16"	572-214	Knob, Channel Selector
030-395	Cabinet, Walnut	572-221	Knob, Dual Large, Vertical Hold and Tone
030-393	Cabinet, Mahogany	572-220	Knob, Dual Small, Horizontal Hold and Brightness
030-394	Cabinet, Blonde		
110-448	C.R.T. Strap Assembly, 21" R.H.	100-003	Line Cord and Plug POSJ 1/32 8 Feet
110-449	C.R.T. Strap Assembly, 21" L.H.	110-466	Ornamental Strip and Screw Assembly
303-334	C.R.T. Rubber Cushion	332-683	Panel, Window 21"
301-537	C.R.T. Bracket	571-118	Plug, 5 Prong, EBY, 60-5 m.
060-185	C.R.T. Deflection Yoke	609-201	Plug, Button
121-188	C.R.T. Yoke and Mounting Board Assembly	041-138	Speaker, 8" P.M., Philips 9746X
332-684	C.R.T. Metal Mask	303-333	Tube Retainer Bakelite
570-039	C.R.T. Socket Assembly	300-712	Tube Retainer Spring

MISCELLANEOUS PARTS

Models RM702, RM703, RM704, RM706

Part No.	Description
070-216	Antenna, Silver Vortex
121-162	Antenna, Panel Mounting Plate Assembly
571-227	Connector and Lead E.H.T.
301-346	Deflection Yoke Bracket
301-354	Deflection Yoke Support Bracket
632-018	Grommet, Rubber
130-140	Ion Trap Magnet
572-158	Knob, Fine Tuning
572-217	Knob, Volume, On-Off
572-155	Knob, Contrast
572-206	Knob, Local-Distant
080-142	Switch, Local-Distant
120-930	Socket Assembly E.H.T.
080-143	Switch, Safety, Spring Action
301-339	Spring Clip, Core Guide
301-531	Spring, Tube Grounding
570-001	Tube Socket, Octal, 1-5/16" mtg.
570-031	Tube Socket, Octal, 1-1/2" mtg.
570-018	Tube Socket, 7 Prong Miniature, 8 Contact
570-020	Tube Socket, 9 Prong Miniature, 8 Contact
644-504	Tube Shield, 1⅜" Long
664-509	Tube Shield, 1¾" Long
325-071	Tube Mounting Collar
664-506	Tube Shield Base
644-508	Tube Shield Base, ⅞" Diameter

Model RM702 only

121-179	Back Cover Assembly
030-379	Cabinet, Walnut
030-380	Cabinet, Mahogany
030-381	Cabinet, Blonde
110-444	C.R.T. Strap Assembly, 17" R.M.
110-445	C.R.T. Strap Assembly, 17" L.H.
303-270	C.R.T. Rubber Cushion
301-537	C.R.T. Bracket
060-177	C.R.T. Deflection Yoke
313-038	C.R.T. Support Block
121-164	C.R.T. Yoke Mounting Bracket Assembly
332-675	C.R.T. Metal Mask
570-037	C.R.T. Socket Assembly
301-477	Ground Strap (Braid)
572-215	Knob, Channel Selector
572-208	Knob, Dual Large, Vertical Hold
572-209	Knob, Dual Small, Horizontal Hold
572-207	Knob, Brilliance
100-061	Line Cord and Plug POT 1/64 8 Feet
110-466	Ornamental Strip and Screw Assembly
332-676	Panel, Window 17"
330-062	Rogers Crest (Walnut)
041-145	Speaker, P.M., 5" x 7"
301-573	Speaker Mounting Bracket
310-052	Spring, Dial Cord

Model RM703 only

121-182	Back Cover Assembly
030-386	Cabinet, Walnut
030-387	Cabinet, Mahogany
030-388	Cabinet, Blonde
110-444	C.R.T. Strap Assembly, 17" R.H.
110-445	C.R.T. Strap Assembly, 17" L.H.
303-270	C.R.T. Rubber Cushion
301-537	C.R.T. Bracket
060-177	C.R.T. Deflection Yoke
313-038	C.R.T. Support Block
121-164	C.R.T. Yoke Mounting Bracket Assembly
332-677	C.R.T. Metal Mask, 17"
570-037	C.R.T. Socket Assembly
332-680	Escutcheon, Trap Door
301-477	Ground Strap (Braid)
572-215	Knob, Control, Channel Selector
100-003	Line Cord and Plug POSJ 1/32 8 Feet
110-467	Ornamental Strip and Screw Assembly
332-678	Panel, Window 17"
609-201	Plug, Button
330-048-2	Rogers Script Name
310-052	Spring, Dial Cord
041-138	Speaker, 8" P.M., Philips 9746X

Model RM704 only

121-187	Back Cover Assembly
303-335	Bottom Cover, Pressboard
592-101	Braid, Shielding, 3/16
030-389	Cabinet, Walnut
030-390	Cabinet, Mahogany
030-391	Cabinet, Blonde
110-448	C.R.T. Strap Assembly, 21" R.H.
110-449	C.R.T. Strap Assembly, 21" L.H.
303-334	C.R.T. Rubber Cushion
301-537	C.R.T. Bracket
060-185	C.R.T. Deflection Yoke
121-188	C.R.T. Yoke and Mounting Board Assembly
332-684	C.R.T. Metal Mask, 21"
570-039	C.R.T. Socket Assembly
571-119	Connector, EBY 5 Contact
571-105	Contact, EBY
572-219	Knob, Channel Selector
572-208	Knob, Dual Large, Vertical Hold
572-209	Knob, Dual Small, Horizontal Hold
572-207	Knob, Brilliance
100-061	Line Cord and Plug POT 1/64 8 Feet
110-466	Ornamental trip and Screw Assembly
332-683	Panel, Window 21"
571-118	Plug, 5 Prong EBY, 60-5 m.
330-062	Rogers Majestic Crest
041-145	Speaker, P.M., 5" x 7"
301-573	Speaker Mounting Bracket
303-333	Tube Retainer, Bakelite
300-712	Tube Retainer Spring

Model RM705 only

030-401	Cabinet, Walnut
030-402	Cabinet, Mahogany
030-403	Cabinet, Blonde
572-219	Knob, Channel Selector
572-158	Knob, Fine Tuning
572-217	Knob, Volume
572-155	Knob, Contrast
121-247	Name Plate and Back Cover Assembly
330-062	Rogers Majestic Crest

V	1 20 2 8 3 9 4 10 5
L	1 2 6 7 3 4 5 8 9 10 11 101 102 103 104 105 106
L	261 262 263 264 265 266 241 267 242 243 244
C	3 4 5 7 6 18 8 9 14 15 16 19 101 102 105 103 104 106 107 10
C	20 1 2 7 21 10 11 12 13 119 151
C	261 262 263 264 241 243 244 245 246 247 248 249.250 251 253 25
R	1 2 3 4 5 6 101 7 8 9 10 11 102 103 104 105 106 107 108 109 110 111 112 113 13
R	254
R	261 241 242 243 246 245 244 247 248 249 250 251 25

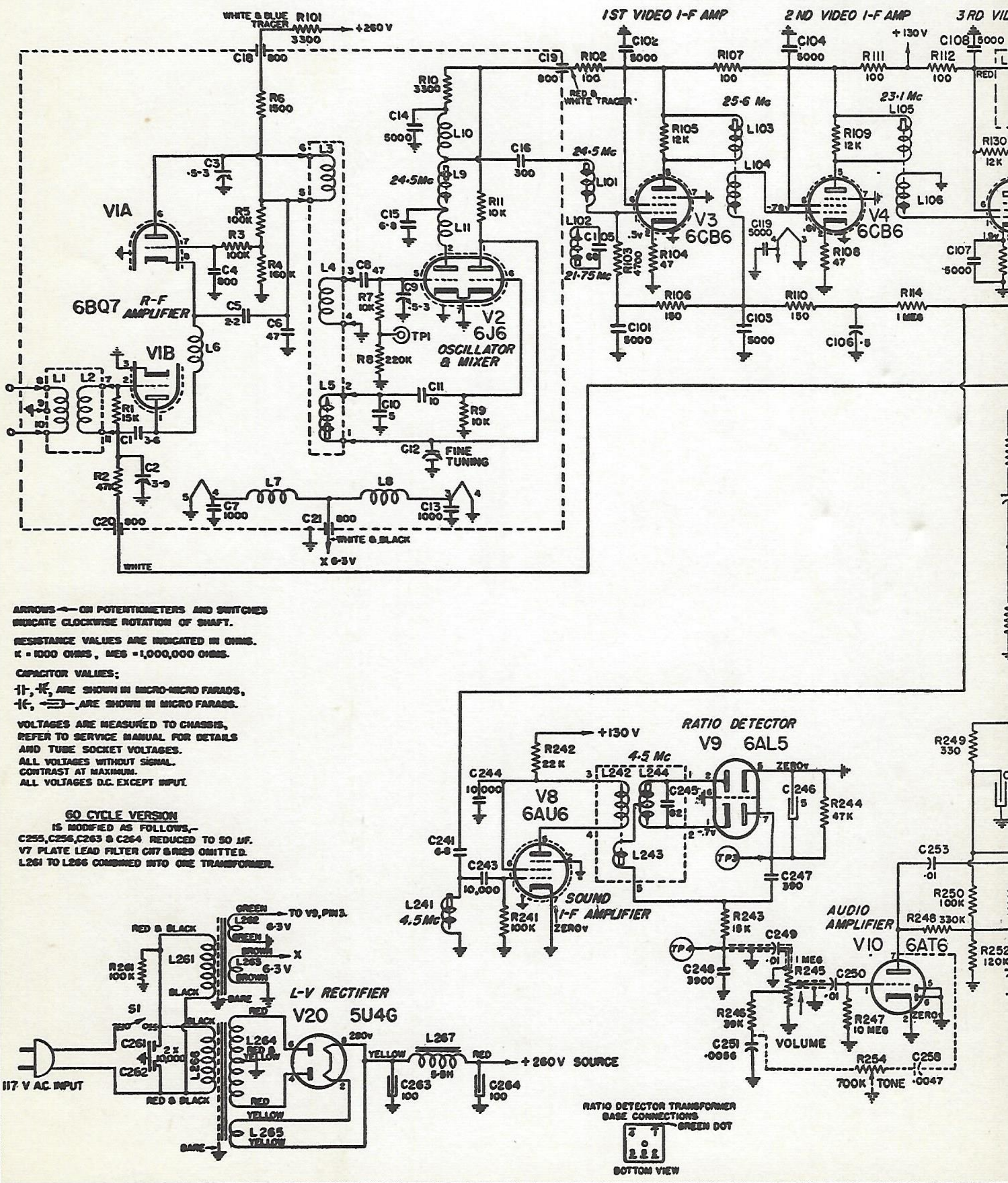

ARROWS ← ON POTENTIOMETERS AND SWITCHES INDICATE CLOCKWISE ROTATION OF SHAFT.

RESISTANCE VALUES ARE INDICATED IN OHMS.
K = 1000 OHMS, MEG = 1,000,000 OHMS.

CAPACITOR VALUES;
⊣⊢, ⊣(, ARE SHOWN IN MICRO-MICRO FARADS,
⊣(, ⊂⊐, ARE SHOWN IN MICRO FARADS.

VOLTAGES ARE MEASURED TO CHASSIS,
REFER TO SERVICE MANUAL FOR DETAILS
AND TUBE SOCKET VOLTAGES.
ALL VOLTAGES WITHOUT SIGNAL.
CONTRAST AT MAXIMUM.
ALL VOLTAGES D.C. EXCEPT INPUT.

60 CYCLE VERSION
IS MODIFIED AS FOLLOWS,–
C255, C256, C263 & C264 REDUCED TO 50 µF.
V7 PLATE LEAD FILTER C117 & R129 OMITTED.
L261 TO L266 COMBINED INTO ONE TRANSFORMER.

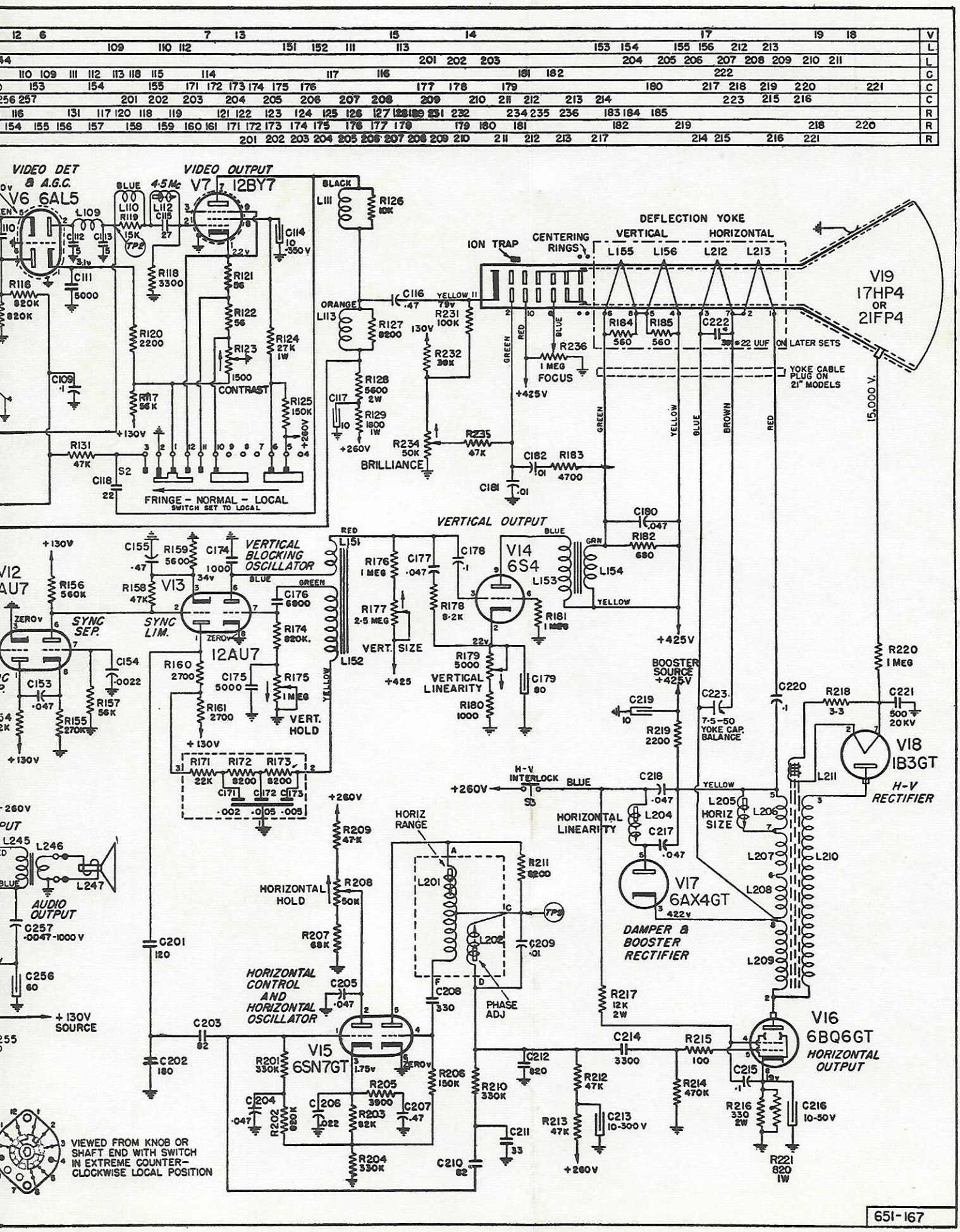
VIDEO DET & A.G.C.
V6 6AL5
VIDEO OUTPUT
V7 12BY7
4.5Mc
DEFLECTION YOKE
VERTICAL
HORIZONTAL
CENTERING RINGS
ION TRAP
V19 17HP4 OR 21FP4
FOCUS
CONTRAST
BRILLIANCE
ON LATER SETS
YOKE CABLE PLUG ON 21" MODELS
FRINGE - NORMAL - LOCAL
SWITCH SET TO LOCAL
VERTICAL OUTPUT
V14 6S4
VERTICAL BLOCKING OSCILLATOR
V13 12AU7
SYNC SEP.
SYNC LIM.
VERT. SIZE
VERTICAL LINEARITY
VERT. HOLD
BOOSTER SOURCE +425V
7-5-50 YOKE CAP. BALANCE
V18 1B3GT
H-V RECTIFIER
H-V INTERLOCK
HORIZ RANGE
HORIZONTAL LINEARITY
HORIZ SIZE
V17 6AX4GT
DAMPER & BOOSTER RECTIFIER
HORIZONTAL HOLD
HORIZONTAL CONTROL AND HORIZONTAL OSCILLATOR
PHASE ADJ
V15 6SN7GT
V16 6BQ6GT
HORIZONTAL OUTPUT
AUDIO OUTPUT
+130V SOURCE
VIEWED FROM KNOB OR SHAFT END WITH SWITCH IN EXTREME COUNTER-CLOCKWISE LOCAL POSITION

651-167

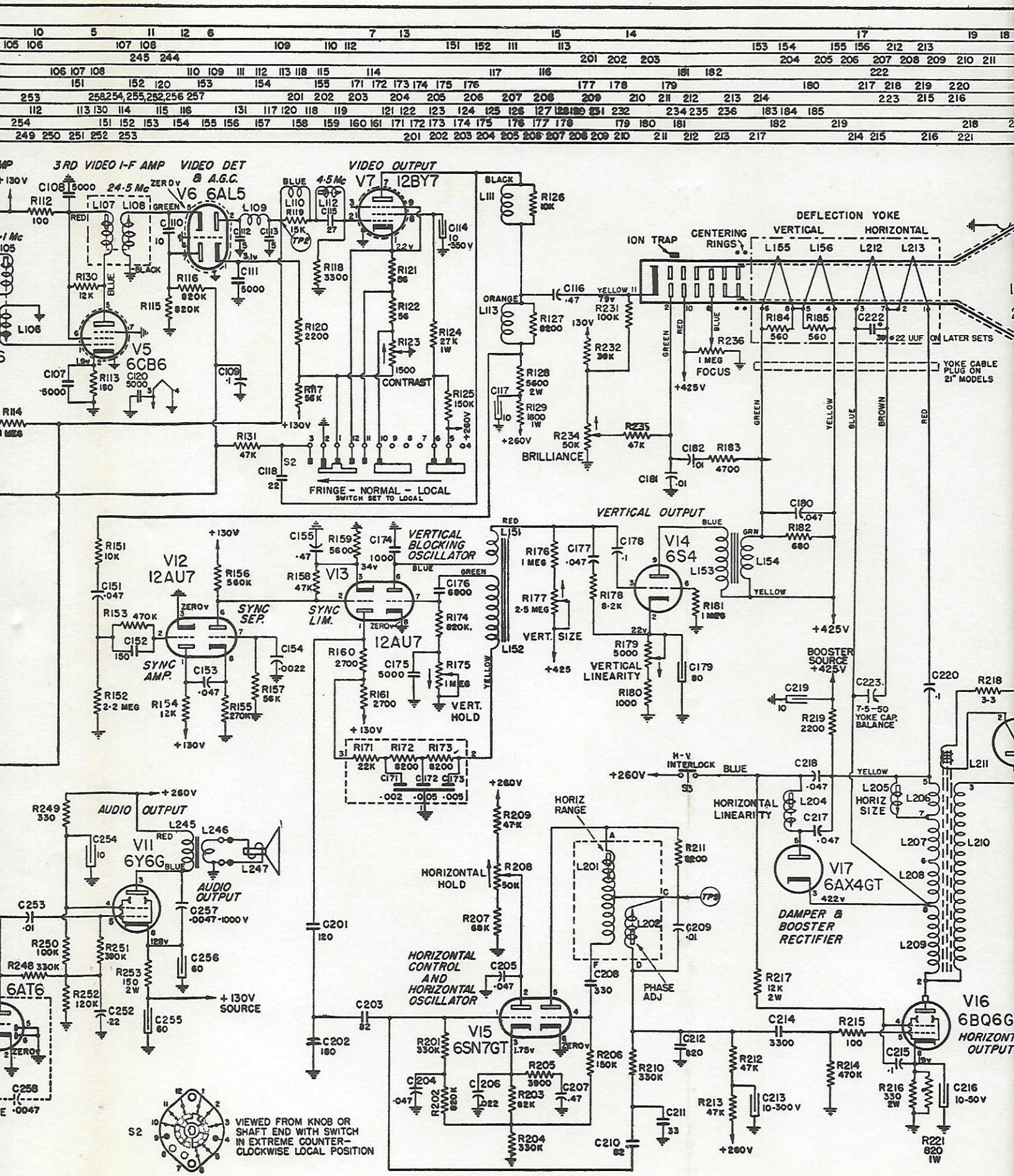
3RD VIDEO I-F AMP
VIDEO DET & A.G.C.
VIDEO OUTPUT
V6 6AL5
V7 12BY7
V5 6CB6
24.5 Mc
4.5 Mc
DEFLECTION YOKE
VERTICAL
HORIZONTAL
CENTERING RINGS
ION TRAP
L155 L156 L212 L213
R184 560
R185 560
C222 22 UUF ON LATER SETS
YOKE CABLE PLUG ON 21" MODELS
R236 1 MEG FOCUS
CONTRAST
BRILLIANCE
FRINGE - NORMAL - LOCAL
SWITCH SET TO LOCAL
VERTICAL OUTPUT
V14 6S4
VERTICAL BLOCKING OSCILLATOR
V13 12AU7
V12 12AU7
SYNC SEP.
SYNC LIM.
SYNC AMP.
VERT. SIZE
VERTICAL LINEARITY
VERT. HOLD
BOOSTER SOURCE +425V
7.5-50 YOKE CAP. BALANCE
H-V INTERLOCK
HORIZONTAL LINEARITY
HORIZ SIZE
V17 6AX4GT
DAMPER & BOOSTER RECTIFIER
V16 6BQ6G
HORIZONT OUTPUT
AUDIO OUTPUT
V11 6Y6G
AUDIO OUTPUT
+130V SOURCE
6AT6
HORIZ RANGE
HORIZONTAL HOLD
HORIZONTAL CONTROL AND HORIZONTAL OSCILLATOR
V15 6SN7GT
PHASE ADJ
S2
VIEWED FROM KNOB OR SHAFT END WITH SWITCH IN EXTREME COUNTER-CLOCKWISE LOCAL POSITION